Bonus CD Storage Case

SHOP SECRETS REVEALED — ANTIQUE PAINT FINISH!

Woodsmith®

www.Woodsmith.com

Vol. 25 / No. 148

all new

9-Drawer Dresser

Also: Learn 3 Simple Table Saw Joinery Techniques

Plus: Classic Computer Cabinet— A Home Office Hideaway

A Publication of August Home Publishing

Woodsmith

No. 148 August, 2003

Publisher Donald B. Peschke
Editor Terry J. Strohman
Assistant Editors Ted Raife, Phil Huber
Art Director Todd Lambirth
Senior Illustrators David Kreyling, Dirk Ver Steeg, Harlan V. Clark
Graphic Intern Nathan Robertson

CREATIVE RESOURCES
Creative Director: Ted Kralicek • *Sr. Project Designers:* Ken Munkel, Kent Welsh, Ryan Mimick, Chris Fitch • *Shop Craftsmen:* Steve Curtis, Steve Johnson • *Sr. Photographer:* Crayola England

SPECIAL PUBLICATIONS
Corp. VP: Douglas L. Hicks • *Art Director:* Douglas A. Flint • *Senior Graphic Designer:* Chris Glowacki • *Senior Editor:* Craig Ruegsegger• *Asst. Editor:* Joel A. Hess • *Graphic Designer:* Jonathan Eike • *Edit. Intern:* Cindy Thurmond

CIRCULATION
Subscriber Services Director: Sandy Baum • *New Business Circ. Mgr.:* Wayde Klingbeil • *Promotions Analyst:* Patrick Walsh • *Renewal Mgr.:* Paige Rogers • *Circ. Marketing Analysts:* Kris Schlemmer, Paula M. DeMatteis • *Sr. Graphic Designers:* Mark Hayes, Robin Friend

CORPORATE SERVICES
VP of Finance: Mary R. Scheve • *Controller:* Robin K. Hutchinson • *Sr. Account.:* Laura J. Thomas • *Accts. Payable:* Mary J. Schultz • *Accts. Receivable:* Margo Petrus • *Production Dir.:* George Chmielarz • *Electronic Pub. Dir.:* Douglas M. Lidster • *System Administrator:* Cris Schwanebeck • *PC Maint. Tech.:* Robert D. Cook• *Pre-press Image Specialists:* Troy A. Clark, Minniette Johnson • *Assoc. Style Dir.:* Rebecca Cunningham • *New Media Mgr.:* Gordon C. Gaippe • *Web Site Art Dir.:* Gene Pedersen • *Web Server Admin.:* Carol Schoeppler • *Web Content Mgrs.:* David Briggs, Sue M. Moe • *Web Designer:* Kara Blessing • *Research Coordinator:* Nick Jaeger •*Pro. Development Dir.:* Michal Sigel • *H.R. Asst.:* Kirsten Koele • *Office Mgr.:* Natalie Lonsdale • *Facilities Mgr.:* Kurt Johnson • *Receptionist:* Jeanne Johnson • *Mail Room/Delivery:* Lou Webber

WOODSMITH STORE
Operations Director: Bob Baker • *Cust. Service Mgr.:* Jennie Enos • *Warehouse Supr.:* Nancy Johnson • *Buyer:* Linda Jones • *Admin. Assist.:* Nancy Downey • *Sr. Cust. Serv. Reps.:* Tammy Truckenbrod, Anna Cox, April Revell, Deborah Rich • *Cust. Serv. Reps.:* Valerie Jo Riley, Kim Harlan, Cheryl Jordan • *Warehouse:* Sylvia Carey •*Store Mgr.:* Dave Larson • *Merchandise Marketing Mgr.:* John Siberell• *Paint Dept. Mgr.:* James Hockins •*Asst. Managers:* Tim Thelen, Brian McCallum • *Sales Staff:* Wendell Stone, Larry Morrison, Mark Johnson, Gregory Kauzlarich, John Warren, Steve Anderson, Dave Fremming, Stephen Duncan, Brian Simmons • *Office Mgr.:* Vicki Edwards

Woodsmith® (ISSN 0164-4114) is published bimonthly (Feb., Apr., June, Aug., Oct., Dec.) by August Home Publishing Company, 2200 Grand, Des Moines, IA 50312.

Woodsmith® is a registered trademark of August Home Publishing.
Copyright© 2003 August Home Publishing Company. All rights reserved.

Subscriptions: Single copy: $4.95. One year subscription (6 issues), $24.95. (Canada/International add $10 per year, U.S. funds.)
Periodicals Postage Paid at Des Moines, IA and at additional offices. USPS/Perry-Judd's Heartland Division Automatable Poly.
Postmaster: Send change of address to *Woodsmith*, Box 37112, Boone, IA 50037-2112.
Subscription Questions? Write to *Woodsmith*, P.O. Box 842, Des Moines, IA 50304-9961 or call 1-800-333-5075, 8:00 am to 5:00 pm, Central Time, weekdays. Or send an email to: orders@woodsmith.com
Email: woodsmith@woodsmith.com
World Wide Web: http://www.Woodsmith.com

Printed in U.S.A.

AUGUST HOME PUBLISHING COMPANY

EDITOR'S COLUMN

SAWDUST

Our shop is always a busy place. For this issue we have a Nine-Drawer Dresser, a Computer Cabinet, a Rail and Stile Mirror, a Country Pine Cabinet, and a new router jig. That's quite a few woodworking projects.

New Store

But lately we've had more going on than building projects for the magazine. We've also been designing and building fixtures and cabinets for a new *Woodsmith Store*.

The first *Woodsmith Store* opened here in Des Moines in 1987 and for the past sixteen years it's been one of my favorite places to shop. It was filled with everything a woodworker could want. Or so I thought.

This new store is huge. It's over three times the size of the old store, with over 20,000 square feet of floor space, including a 4,000 square foot hardwood lumber and plywood area.

In addition to every imaginable type of woodworking tool and equipment, the store is also carrying a full line of *Rockler* hardware. Plus, there's a *Benjamin Moore* paint store, gardening accessories, and a bookstore with thousands of titles — all under one roof.

But my favorite part is the shops. Set-up inside the store are three full-size shops — a basement shop, a garage shop, and a free-standing shop. This way you can check out different tool arrangements and storage ideas to use in your shop at home.

The store is already open for business seven days a week, and there's a Grand Opening celebration scheduled for Sept. 19th - 21st. If you're in the area be sure to stop in and check it out. I think you'll be glad you did. For more information and a map of how to get there, visit the website:

www.Woodsmithstore.com

Woodsmith Readers' Gallery

Visit other *Woodsmith* subscribers' workshops, and see photos of the projects they've built. It's all online in the new Readers' Gallery on the *Woodsmith* web site:
www.Woodsmith.com

We want you to be part of the Readers' Gallery! To submit photos of your favorite *Woodsmith* projects or views of your shop, follow the instructions you'll find at the Reader's Gallery.

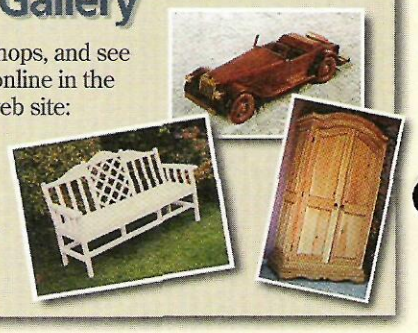

A LOOK INSIDE

CONTENTS

Features

Adjustable Dado Jig 6

Finally, an easy-to-build jig that turns your hand-held router into a quick and accurate tool for cutting dadoes.

Country Pine Cupboard 8

Build this simple country project with three table saw joinery techniques that you can use again and again.

Antique Milk Paint Finish 14

Turn a project from new to antique in a short weekend. Our shop secrets show you how to give a cabinet "instant age."

Classic Computer Cabinet 16

Keep your hi-tech equipment contained in this two-part home office hideaway with its wrap-around doors and tons of storage.

Upper Cabinet 23

Top off the cabinet with a hutch that sports the same joinery and fine details. And it's big enough to "hide" a 21-inch monitor.

Bonus Project: CD Case 24

Reclaim your desk space. This simple case keeps CDs in their place.

Nine-Drawer Dresser 26

This great-looking dresser features basic plywood construction and contrasting colors. Plus there's an optional base and top.

Arched Rail and Stile Mirror 34

You can build this elegant five-board mirror in a weekend.

Departments

Tips & Techniques 4

Shop Notes 25

Sources 35

Country Pine Cupboard page 8

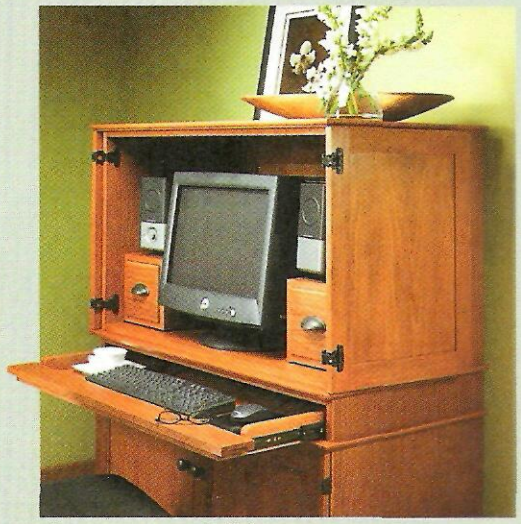

Computer Cabinet page 16

Nine-Drawer Dresser page 26

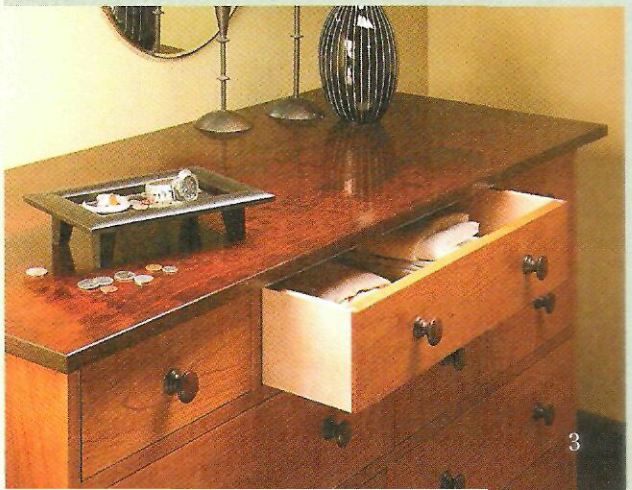

TIPS & TECHNIQUES

Drill Press Crank

Installing a threaded insert can be a challenge. You need to apply enough pressure to get the threads to grab, while at the same time keeping the insert from going in crooked.

A drill press is the perfect solution. With an insert on a cut-off bolt mounted in the chuck, I turn the quill by hand to screw the insert in place.

But sometimes it can be difficult to get a good grip on the chuck. So I came up with this simple crank, as you can see in the photo at right. It fits around the top pulley in the head of the drill press and has a spinner knob.

This crank gives me a lot more leverage for threading the insert into the workpiece. In fact, the insert goes in smoothly with virtually no effort.

The crank is made from a piece of 3/4" plywood. A studded knob and a lock nut make an easy-to-hold handle. And a relief cut between the handle arm and the ring lets you tighten the ring on the pulley with a bolt and star knob, as shown in the drawing.

To use it, start by moving the belt down off the top front pulley and fasten the crank handle to the top pulley wheel. Now position the workpiece and clamp it to the table under the insert. Now slowly turn the crank clockwise. At the same time, lower the insert and it will begin tapping itself into the workpiece.

Aaron Klingenmaier
Lincolnshire, Illinois

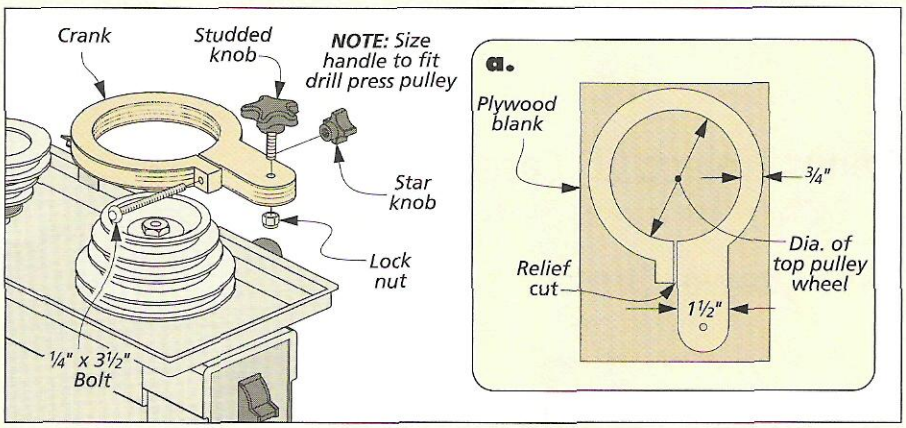

FREE
Online Tips

If you'd like even more woodworking tips, there's a simple solution. Just visit us at our web site and sign up to receive a free tip via email every week.

www.Woodsmith.com

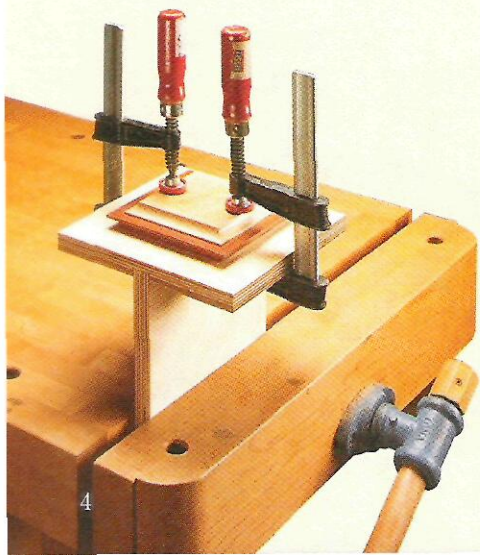

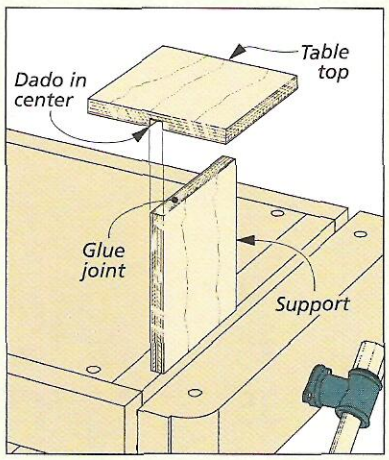

Bench Vise Clamping Table

I build a lot of small projects for gifts. And one of the challenges of these types of projects is gluing and clamping parts this size.

To solve this problem, I made a T-shaped, auxiliary table that clamps in the vise on my workbench, as shown in the photo at left.

There's really not much to it. It's built from two squares of 3/4" plywood. The table top has a centered, 3/8"-deep dado cut in the bottom side to hold the support piece, as in the drawing at left.

Best of all, the table brings the workpieces up to a more comfortable height. And its shape makes it easy to clamp assemblies right to the top of the table.

Walt Boyd
Yakima, Washington

Drill Press Sanding Lathe

I recently built a coffee table and, since I don't own a lathe, I ordered four preturned legs by mail. When they arrived, I discovered that they were only "rough sanded." What I needed was a quick way to sand the legs smooth without creating flat spots.

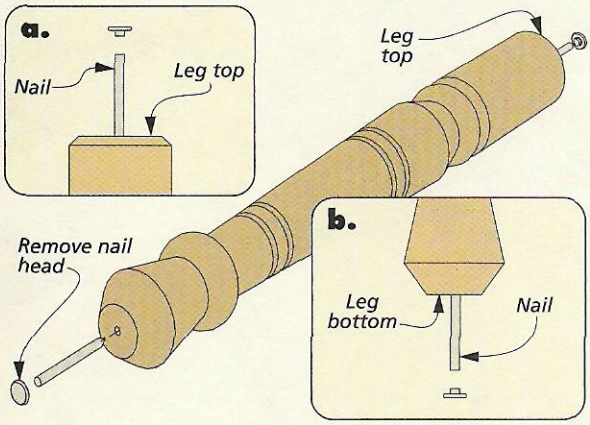

My solution for this problem was to use a couple of nails and turn my drill press into a "sanding lathe," as in the photo at right. I hammered a 16d nail into each end of the leg and cut off the heads, as you can see in the drawings at left. Next, I mounted the top nail in the chuck of the drill press.

The bottom nail is held in a hole I drilled in the middle of a piece of plywood clamped to the drill press table. Then the table can be raised so the bottom nail is inside the hole.

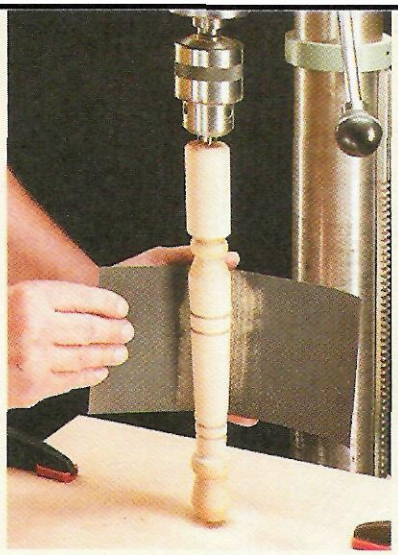

With the drill press set at its lowest speed, I sanded each leg smooth in just a few minutes.

Rod Wolfington
Arlington, Washington

Shop-Made Flush Trim Jig

When it comes to trimming melamine edging flush on shelves and counters, I usually reach for my router and a flush trim bit. The only problem is that keeping the router steady on the narrow edge of a shelf can be difficult. If the router tips, it can gouge the shelf.

In order to overcome this difficulty, I found a way of trimming the edging flush while keeping the router on the *top* of the shelf. If you take a look at the photo at right, you can see how I did this.

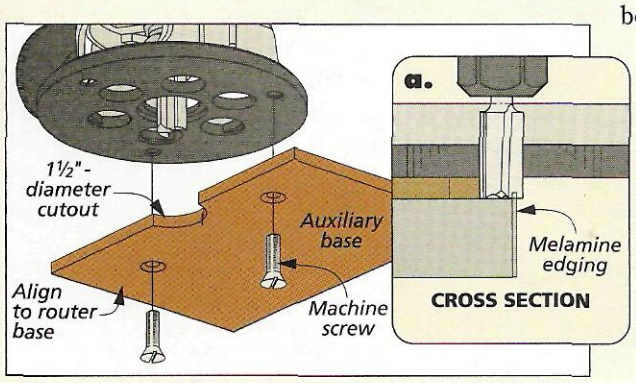

I made an auxiliary base for my router that raises the router up just above the oversize edging. The base is made from a piece of ¼" hardboard with a 1½"-dia. cutout for a straight bit, as in the drawing. Two countersunk holes let you attach the base to the router.

There's not much to using the jig. Just set the router on the shelf and lower the bit until it's just above the surface. And for the cleanest cut, move the router from right to left. Note: Since all the edging is removed, there isn't any danger of it grabbing.

Kent Smith
Huntington Beach, California

QUICK TIPS

KEEP FINISH FRESH

The screw-on caps of my oil finish cans always seem to "freeze up" between uses. To keep the caps easy to open, I applied a layer of petroleum jelly to the threads of the can before resealing the cap.

Ralph Bortner
Amherst, Ohio

WAX CAULK SEAL

I've tried everything to keep my tubes of caulk from drying out and nothing seemed to work. Nothing that is, until I tried dripping candle wax into the tip of the tube. Now it stays soft and ready to use.

Paul Woods
Corvalis, Oregon

SUBMIT YOUR TIPS

If you have an original shop tip or woodworking technique, we would like to hear from you and consider publishing your tip in one or more of our print or electronic publications.

Just write down your tip and mail it to us: *Woodsmith,* Tips and Techniques, 2200 Grand Avenue, Des Moines, Iowa 50312.

Please include your full name, address, and daytime telephone number so that we can contact you in case we have any questions.

If you would like, you can FAX it to us at 515-282-6741 or send us an email message at: woodsmith@woodsmith.com. We will pay you up to $200 if we decide to publish your tip.

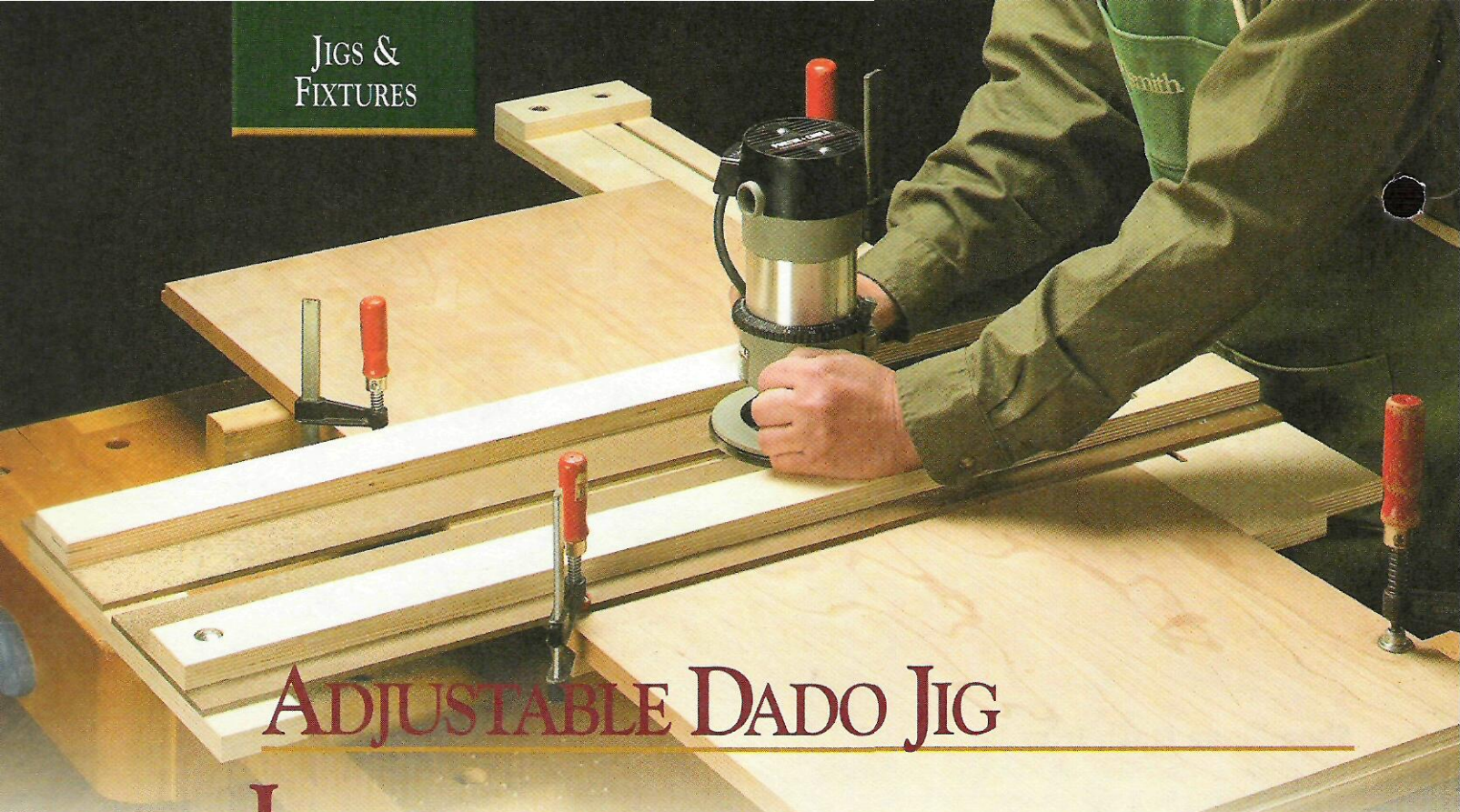

ADJUSTABLE DADO JIG

I've seen a lot of T-square edge guides designed to make routing dadoes in large panels easier. The problem with most of them is that they aren't easily adjustable for odd-thickness material. And even when they are, there's no way to quickly duplicate the dado in another panel.

This jig allows you to rout a dado square to the edge and sized to fit even odd-thickness material (like plywood). And a built-in stop makes duplicating the position of the dado in another panel a breeze (Fig. 1a).

NOTES ON ASSEMBLY. Building the jig is pretty straightforward but there are a couple points worth mentioning. First the guides are made to always be used with one size of router bit (I used a 3/8" straight bit) and the same router base. Mark an index point on the router base and then always run this spot along the guide fence. When you use the selected bit to trim the guide plates, as shown in Fig. 1b, the cut will fall right at the edge of the guide plate.

And second, when you assemble the T-squares, it's important to make them accurate. I initially screwed them together and checked for square. Then I repeated the process, adding glue.

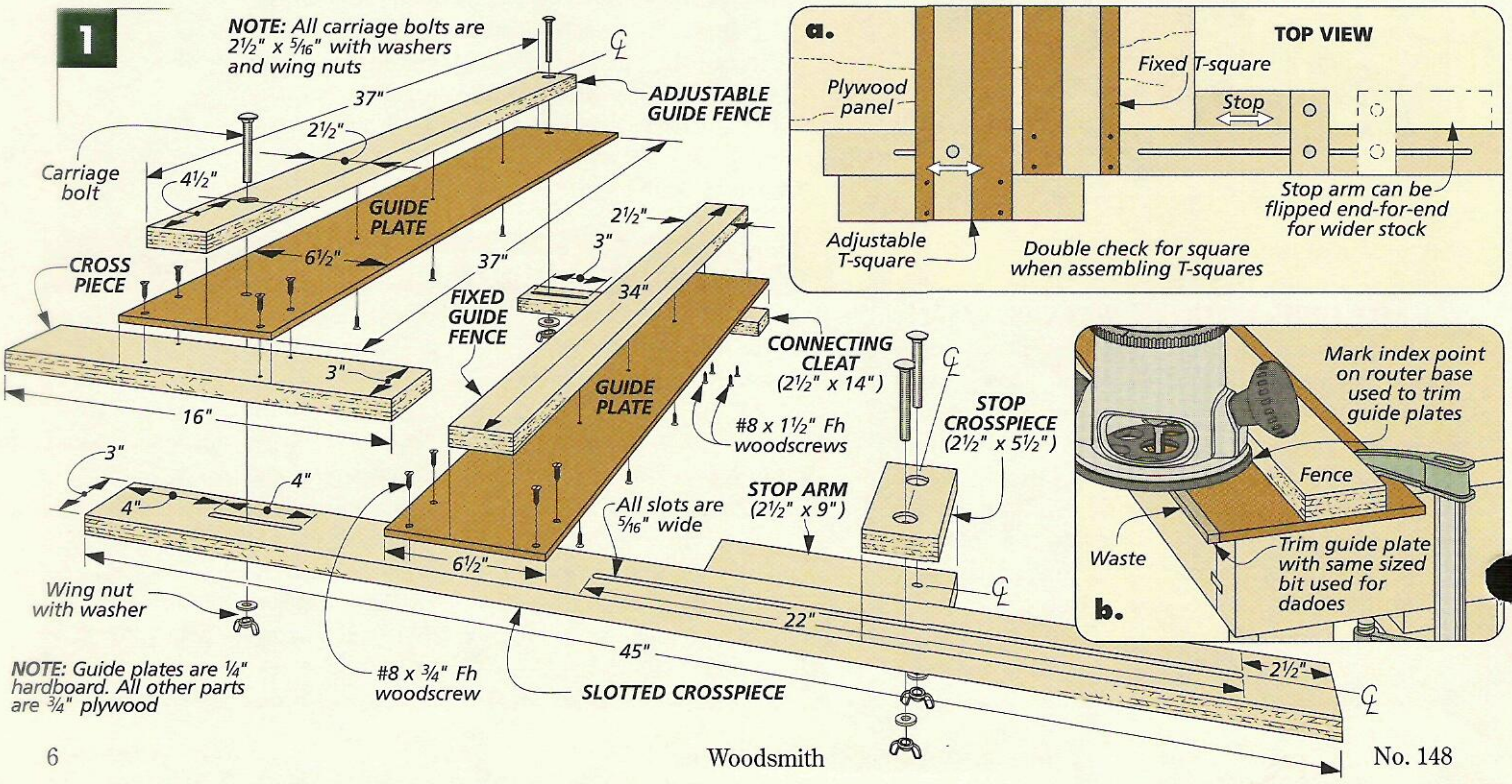

Setting up the Jig

Once you've completed building the dado jig, setting up for a cut goes quickly. Start by laying out the location of one side of all the dadoes on your panel. Note: Don't worry about the other side, I'll get to that later.

SIZING THE DADO. Next, lay the jig on the panel and temporarily clamp it in place with the slotted crosspiece tight against the edge of the workpiece. Set a scrap spacer against the fixed T-square edge of the guide plate, making sure the spacer is the same thickness as the material you're "sizing" the dado for (Fig. 2).

Then slide the adjustable guide over to pinch it tightly. Tighten the guide at one end and repeat this process at the other end of the panel, tightening down the connecting cleat. That's all there is to it.

LOCATING THE DADO. Now you can see why I didn't bother laying out both sides of the dado. Since the jig has already been sized for the exact width you need (and locked in place), locating the dado is simply a matter of lining up the fixed guide plate on your layout mark (Fig. 3a).

If you've laid out your dadoes accurately, you can set the jig right on the money. Make sure the crosspiece is snug to the edge of the panel and clamp the jig down (Fig. 3).

SETTING THE STOP. Duplicating the dado in another panel is a snap thanks to the built-in stop. The stop arm can easily be flipped end-for-end (or even removed) if you need a little bit longer reach (Fig. 1a).

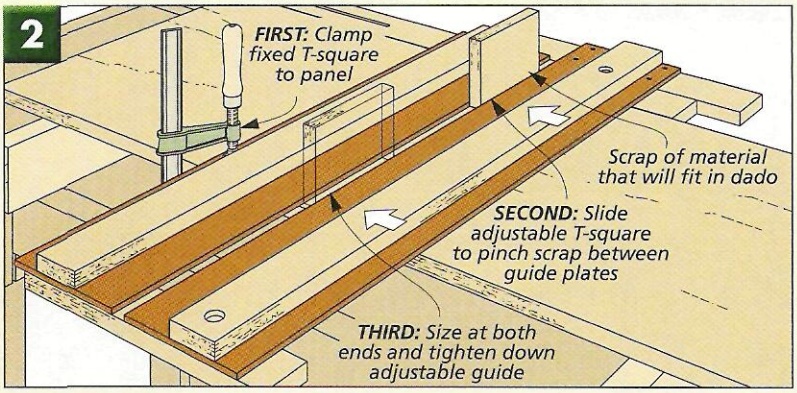

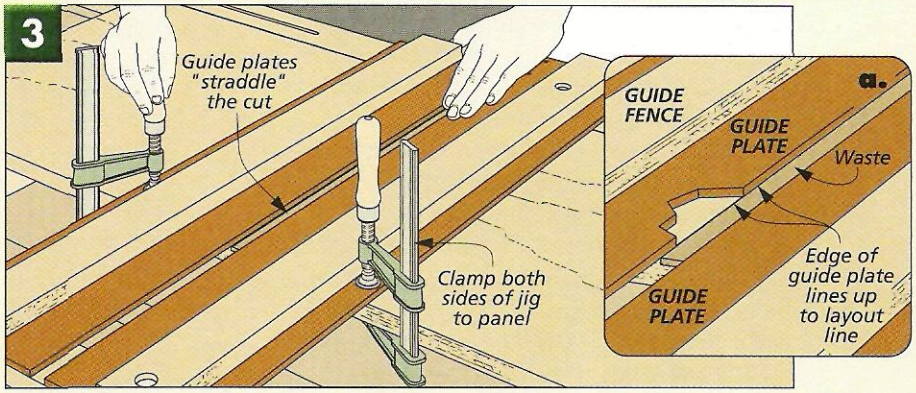

DEPTH OF CUT. The final step is to set the depth of the bit as shown in Fig. 4a. If your dadoes are 1/8" or less, you can set the router to cut the full depth in one pass. Otherwise, it's best to make a series of shallow, overlapping passes.

MAKING THE CUT

You've done the hard part. There's not much to making the cut, but there are a few simple "rules" to follow. First, you can start the cut from either end, but you're always going to move the router from left to right.

And since your cutting a dado wider than your bit, you have to make two passes — up along one guide and back along the other (Figs. 4 and 5).

And always run the edge with the index point (as shown in Fig. 1b) against the fences. Since most base plates aren't perfectly centered on the bit, this will assure that the cut is always on the same line. After you make the first pass, just rotate the router 180° for the return pass.

Finally, maintain good downward pressure on the router for a consistent depth of cut and a flat bottom.

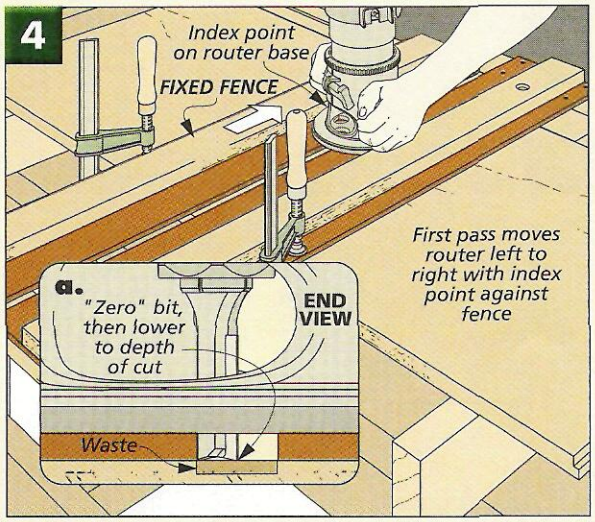

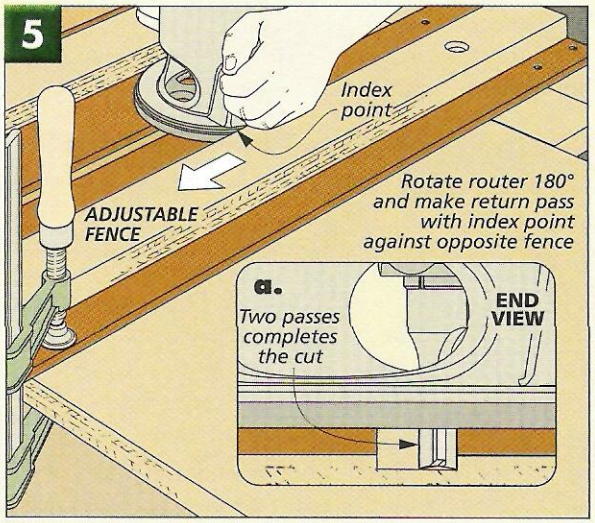

PINE CUPBOARD

Three essential table saw joinery techniques combine to make one great-looking project.

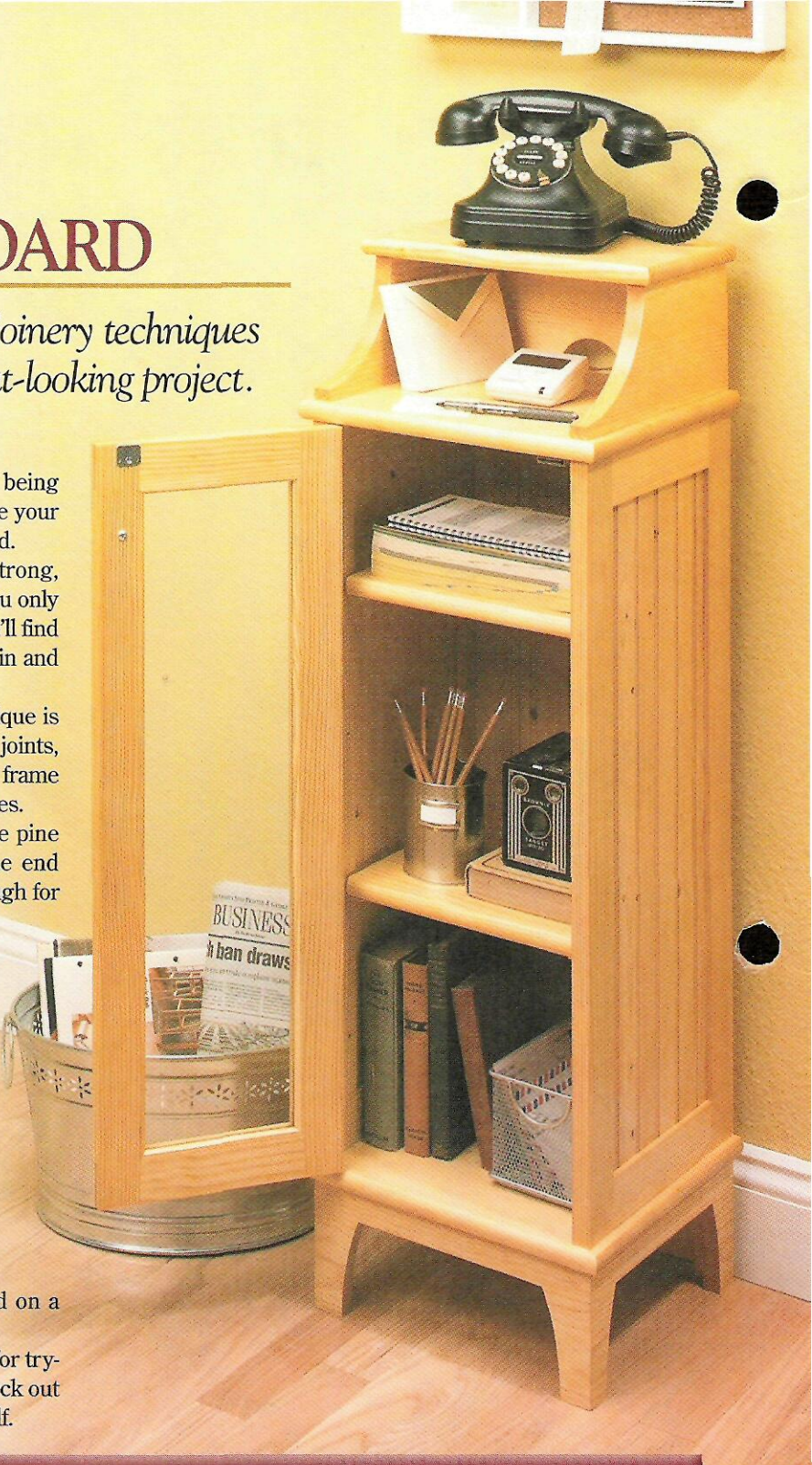

The great thing about woodworking is being able to learn a new technique or hone your skills. That's why I like this pine cupboard.

It's made with three joints that are strong, versatile and easy to make. Best of all, you only need a table saw to cut all three. And you'll find yourself coming back to these joints again and again in other woodworking projects.

STUB TENON AND GROOVE. The first technique is one of the most common woodworking joints, the stub tenon and groove. It's great for frame and panel assemblies like the cabinet sides.

MITER AND SPLINE. The base sides of the pine cupboard meet at an angle to hide the end grain. But for this joint to be strong enough for the job, it needs a little reinforcement. So a spline is glued into a dado cut in the end of each part.

BRIDLE JOINT. For the door, I used a bridle joint. It's also called an open mortise and tenon because the mortises and tenons are completely exposed. This is a very rigid joint.

DESIGN OPTIONS. Another great feature of this country-style cupboard is that it's really two projects in one. Besides the cupboard, you could build just the phone pedestal to keep a telephone and phone book organized on a countertop, as you can see on page 13.

This project makes a great candidate for trying an antique, milk paint technique. Check out the article on page 14 and see for yourself.

MATERIALS & SUPPLIES LIST

A	Side Top Rails (2)	3/4 x 2 - 9 1/2	**I**	Shelves (2)	3/4 x 10 7/8 - 10 1/4	**Q**	Pedestal Top (1)	3/4 x 8 - 13
B	Side Bottom Rails (2)	3/4 x 2 1/16 - 9 1/2	**J**	Base Sides (2)	3/4 x 5 1/4 - 12 1/2			
C	Side Stiles (4)	3/4 x 2 - 29 1/4	**K**	Base Front/Back (2)	3/4 x 5 1/4 - 12	•	(4) 1/8" Hardboard Splines (1/2" x 5 1/4")	
D	Back Top Rail (1)	3/4 x 2 - 7 1/2	**L**	Door Stiles (2)	3/4 x 2 - 29 1/8	•	(20) #8 x 1 1/4" Fh Woodscrews	
E	Back Bottom Rail (1)	3/4 x 2 1/16 - 7 1/2	**M**	Door Rails (2)	3/4 x 2 - 10 3/8	•	(8) 1/4" Shelf Supports	
F	Back Stiles (2)	3/4 x 2 1/4 - 29 1/4	**N**	Stop	1/4 x 1/4 - 70 In. in.	•	(1 pr.) No-mortise Hinges w/Screws	
G	Bead Board	25 In. ft.	**O**	Pedestal Sides (2)	3/4 x 5 1/4 - 12 1/2	•	(1) Magentic Door Catch w/Screws	
H	Top/Bottom (2)	3/4 x 13 - 13	**P**	Pedestal Back (1)	3/4 x 5 1/4 - 11	•	(1) Door Knob w/Screws	

Building a Stub Tenon and Groove Frame

The side and back panels of the case are joined with "stub tenon and groove" joints, as in Fig. 1. Unlike mortise and tenon joinery, the short (stub) tenons fit in the same grooves used to hold the panels. This means they're easy to cut since there's no extra mortising step.

GROOVES. When making a stub tenon and groove joint, I usually cut the grooves in the stiles first. Then I can adjust its width to hold the panel, which in this case is 1/4" bead board panel, see margin photo.

And while it's possible to set up a dado blade to cut the groove in a single pass, it's difficult to get it perfectly centered. To solve this problem, I make two passes with a regular blade (Fig. 2). Flipping the piece end for end between passes centers the groove.

You'll need to cut grooves in all six *side (A, B)* and *back (D, E) rails*, as well as the six *side (C)* and *back (F) stiles*. Start with the groove roughly centered and nudge the rip fence out until the panel fits snug in the groove (see margin photo).

STUB TENONS. With the grooves cut, the next step is to cut the stub tenons on the ends of the rails. Once again, you cut the stub tenons to fit the grooves you've cut in the stiles.

To make it easier to cut the tenons, I installed a dado blade in the table saw and attached an auxiliary fence on the rip fence. Then position the fence so that the dado blade is partially exposed. This way, you can cut the tenons to length in a single pass, as in Fig. 3. But don't cut the tenons just yet — you'll need to adjust the height of the blade first.

You're looking for a snug fit, so start out with it set lower than you need. Here again, you'll automatically center the tenon by flipping the piece over and making another pass. Now, check the fit. If the fit is too tight, you'll need to raise the blade just a bit (remember that you'll be making two passes).

ASSEMBLY. How you glue up the stub tenon and groove frame depends on what the panel is made of. For solid-wood panels, like the *bead board (G)*, I apply glue only to the frame joints so the panels can expand and contract. For plywood, it's okay to glue the panel in place.

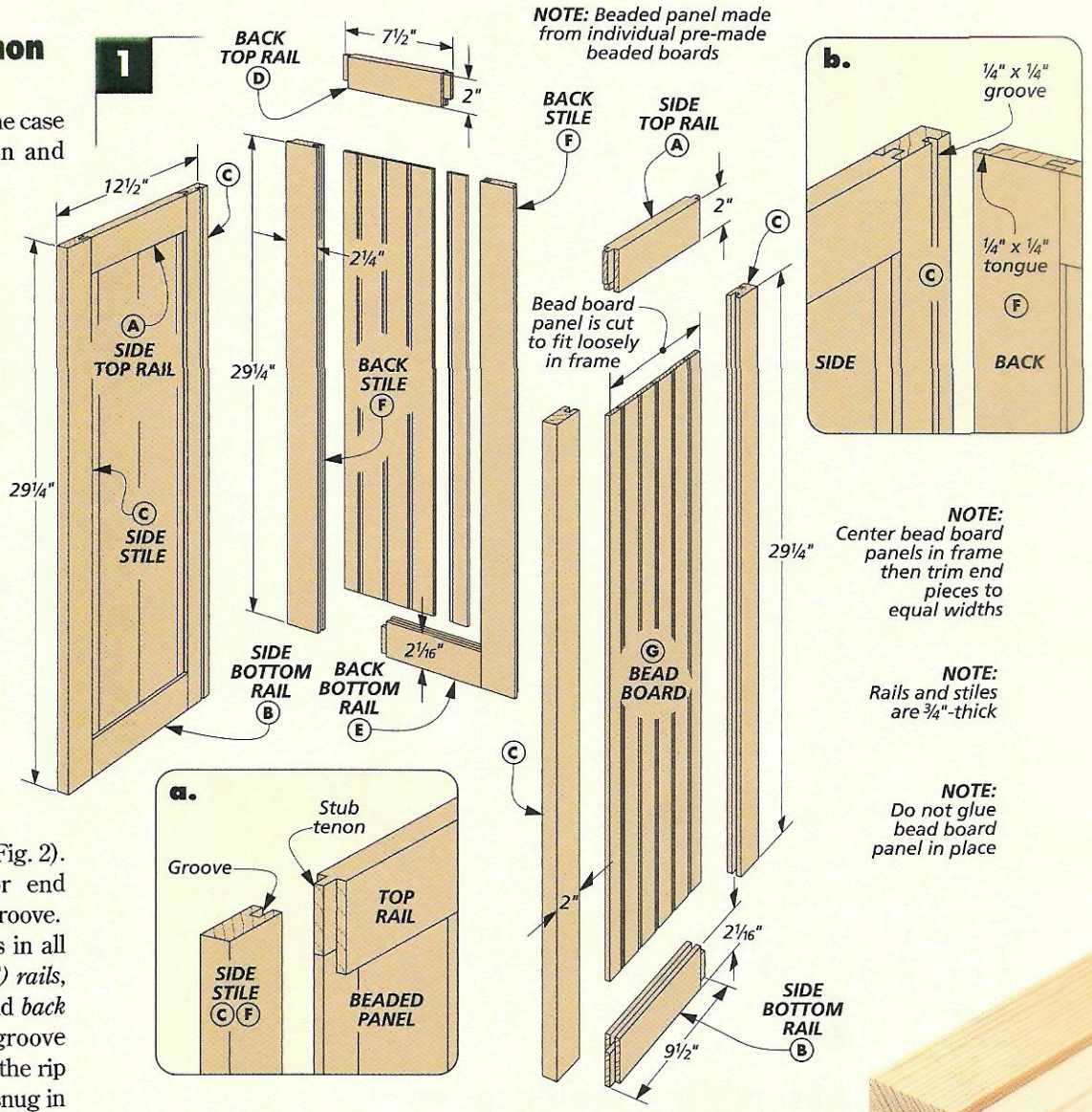

▲ *Size the grooves for the full thickness of the bead board panel.*

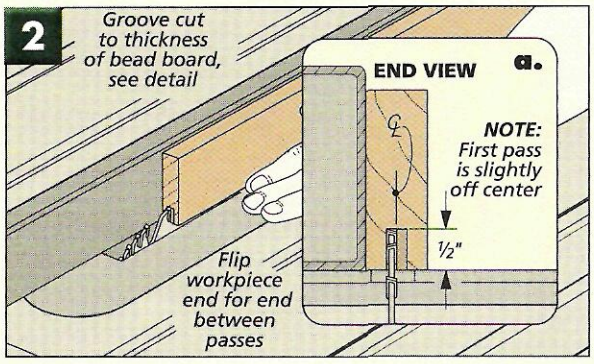

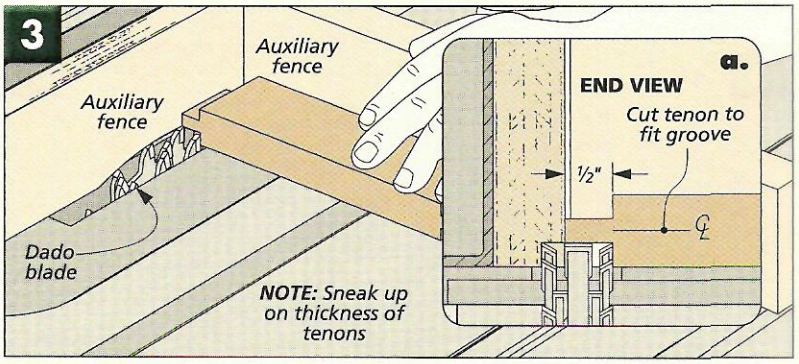

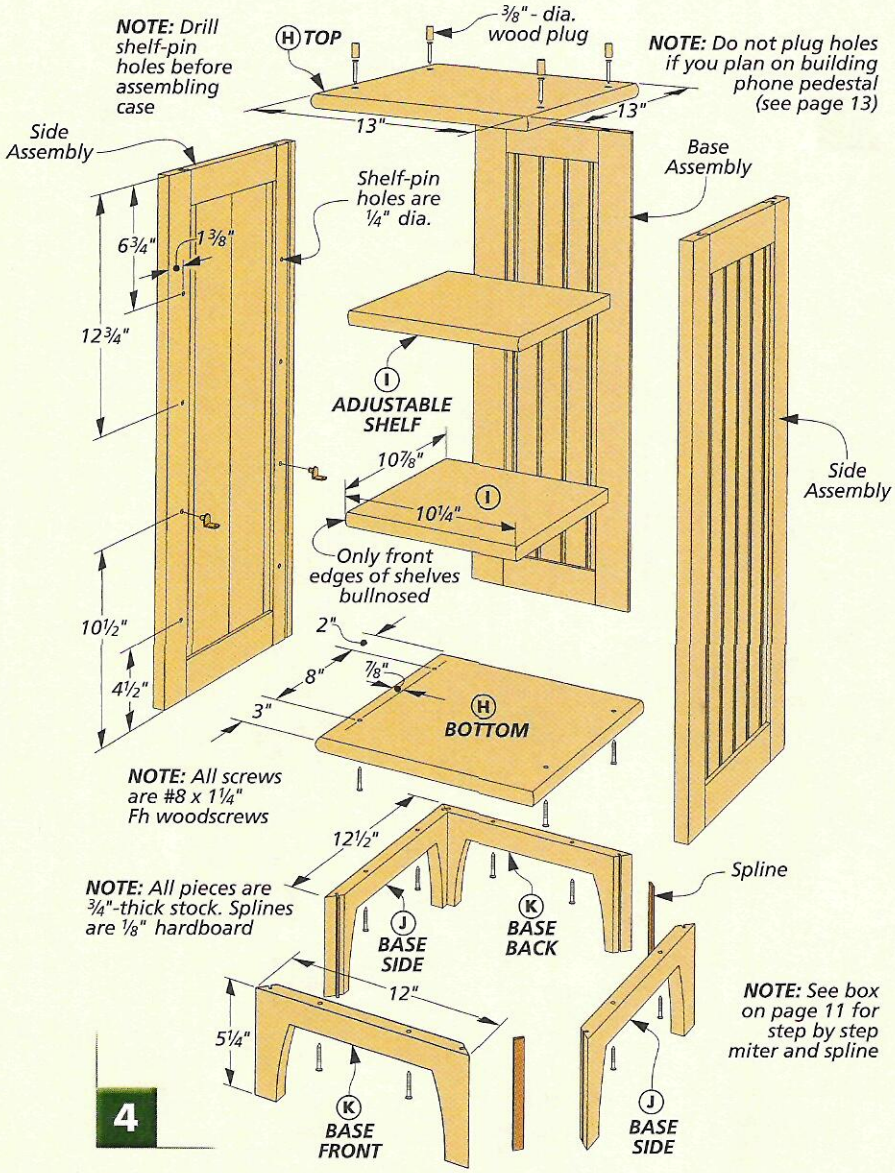

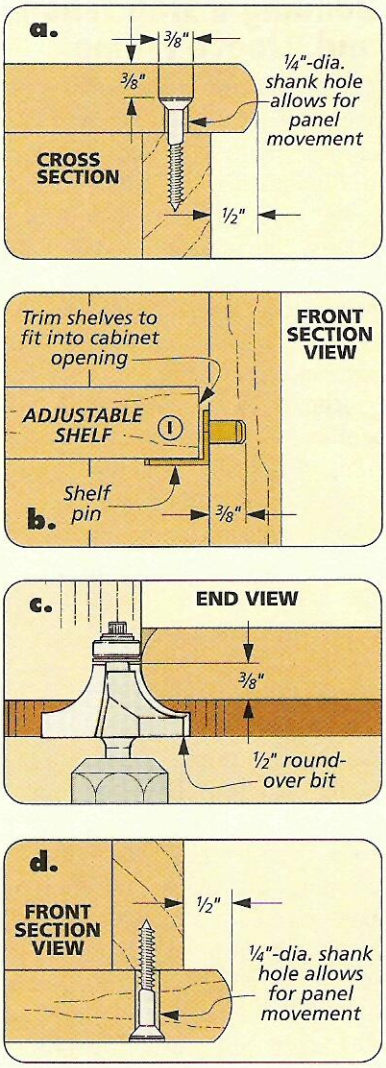

Assembling the Case

With the frames assembled, the case goes together pretty easily. The side and back frames are joined to make a U-shaped case. A solid-wood top and bottom are added and then the case is attached to a mitered base. Adjustable shelves complete the case.

JOIN CASE SIDES AND BACK. Before cutting the tongues and grooves to join the frames, drill the shelf pin holes in the side frame stiles, as shown in Fig. 4. You'll want to carefully lay out these holes so they end up parallel and the shelves sit straight.

As I mentioned, the case side frames are attached to the back frame using a simple tongue and groove joint. To make it, start by cutting a groove along the inside back edge of each side frame, as shown in Figs. 5 and 5a. Then you can cut matching tongues on the back frame to fit in the grooves, as illustrated in Figs. 6 and 6a.

Now the case can be glued together. But I needed a way to keep it square. To get around this problem, I cut a pair of plywood spacers that will prevent the case sides from bowing in while the glue dries.

ATTACH TOP AND BOTTOM. The *top* and *bottom (H)* of the case can now be glued up from 3/4"-thick pine. After the panels are dry, you can rout a bullnose on the front and sides (but not the back). To do this, install a

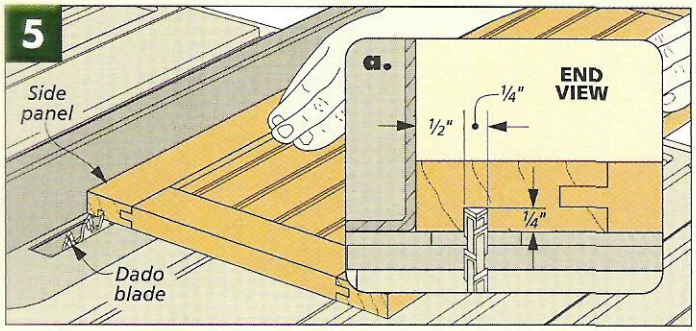

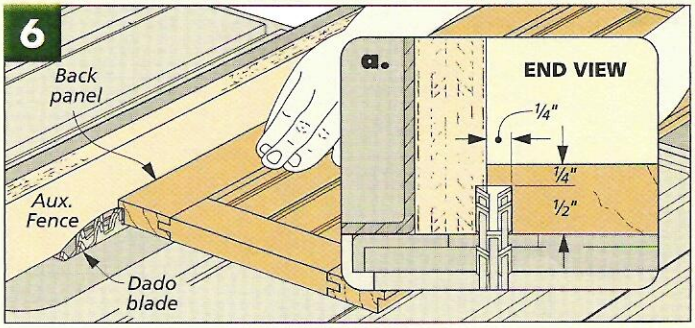

½" round-over bit and raise it ⅜" above the router table. Then make a pass on each edge, as in Fig. 4c.

The top and bottom are attached with screws. But because they're solid-wood panels, you'll need to account for seasonal movement. To do this, simply drill oversize shank holes in the panels, as in Figs. 4a and 4d. Note: If you don't plan on making the phone pedestal, you can plug the screw holes in the top.

GLUE UP SHELVES. Before moving on to the base, glue up two *shelves (I)* for the inside of the case. But unlike the top and bottom, only the front edge gets the bullnose detail.

SHAPE THE BASE. The base of the stand is made up of two *sides (J)* and a *front* and *back (K)*. Each part has a cutout to form four legs. I found it easier to cut the miter and spline joinery before cutting the leg profile. (You can read more about that in the box below.)

Now before assembling the base, you need to cut the leg profile. I did this on the band saw, as in Fig. 7. Just be sure to cut to the waste side and smooth out the curve with a drum sander. I used some sandpaper to clean up the corner.

Like the top and bottom, the base attaches with screws. I started by drilling shank holes through the cutout in the base (Figs. 8 and 8a). Then assemble the base with glue and splines. Finally, flip the case over and screw the base in place.

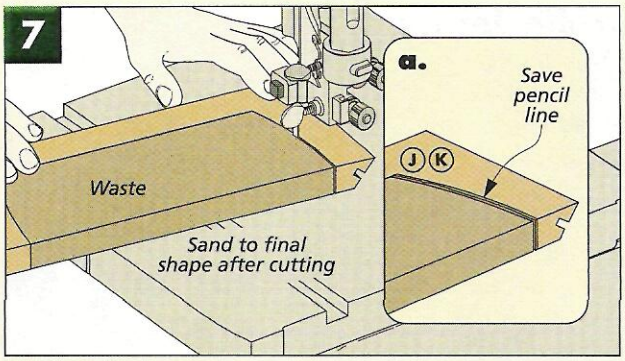

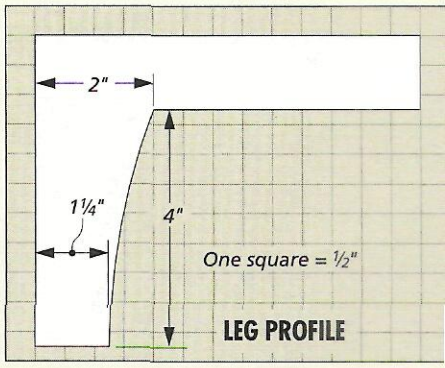

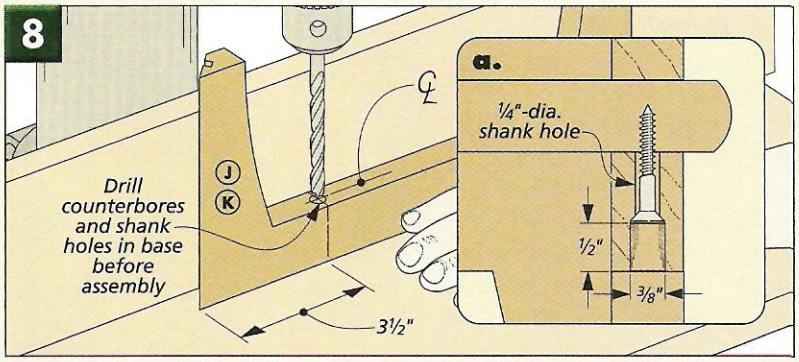

SPLINES STRENGTHEN MITER JOINTS

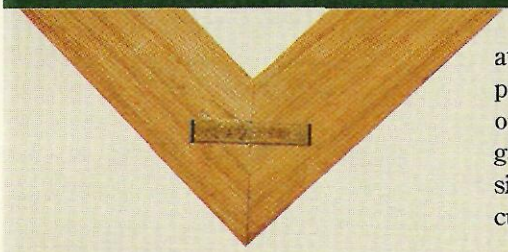

A basic miter joint is perfect for hiding end grain, but this makes for a weak glue joint. To strengthen it, splines are glued into saw kerfs cut in the miters.

MITER TO SIZE. First cut the base pieces to rough size. An auxiliary fence attached to the miter gauge helps support the parts. Next, I cut a 45° miter on one end. I used a stop block on the miter gauge fence to cut the sides to the same size, as in Figs. 1 and 1a. (Then reset it to cut the cut the front and back.)

CUT THE SPLINE KERF. With the parts cut to size, you can then cut the kerf for the spline. To do this, leave the blade tilted at 45° and set the fence, as in Fig. 2.

Then using the miter gauge to support the piece, cut a kerf in each end. For the strongest joint, it's best to cut the kerf closer to the inside face of the joint. When the kerf is higher, it might cut through the outside face.

MAKING SPLINES. The material I use for the splines depends on if the spline will be visible or not. If it is, I cut the splines from the same material as the stock used in the project. However, if the joint isn't going to be seen, I prefer to use hardboard. When cutting the splines make sure to cut them slightly narrower (1/16") than the kerfs. This way the joint will close up tightly.

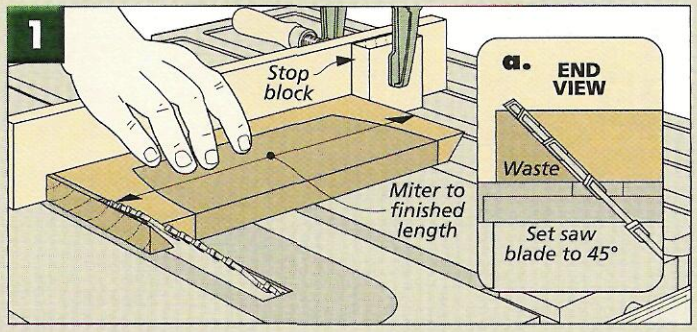

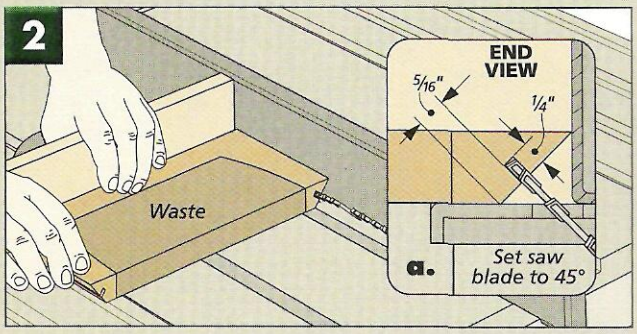

Making Bridle Joints

When it comes to building doors with glass panels, I like to use a bridle joint. The benefit of this joint is that its large glue surfaces make it strong enough to support the weight of the glass. Note: For a project like this, I use double-strength glass.

CUTTING THE MORTISE. Start by cutting the *door stiles (L)* and *rails (M)* to size from ¾"-thick stock. Then mortises are cut all the way through the stile ends, with a matching full-width tenon on the end of each rail (Fig. 9).

Since the stiles are stood on end when cutting the mortise, I needed a way to support the pieces. So I made a simple jig to run alongside my rip fence. The bridle jig has a ¾"-thick hardwood body to keep the workpiece from tipping, and a hardboard arm to hold it against the fence, as in Fig. 10. The saw blade height matches the width of the rail (2"), and I used the rip fence to center the workpiece, making two passes to cut the mortise (Fig. 11).

CUT MATCHING TENONS. Now the tenons can be cut on the rails. Just like the stub tenons cut earlier, I used a dado blade. But this time the tenons are sized to match the width of the stiles, as in Fig. 12a.

Since the tenons are visible on two sides, I attached an auxiliary fence to my miter gauge to prevent chipout. Cut the shoulders first and clean up the waste by making several passes, as shown in Fig. 12.

ROUTING RABBET FOR GLASS. Once the frame is glued together, you can rout a rabbet on the inside face of the door for the glass panel. A hand-held router and a rabbetting bit work fine for this (Fig. 13). Then clean up the corners with a chisel.

To keep the glass in place, I made some quarter-round *stop (N)*. The door mounts to the case with "no-mortise" hinges. Finally, I attached a knob and a magnetic catch.

▲ *Bridle joints create rigid frames perfect for cabinet doors.*

9

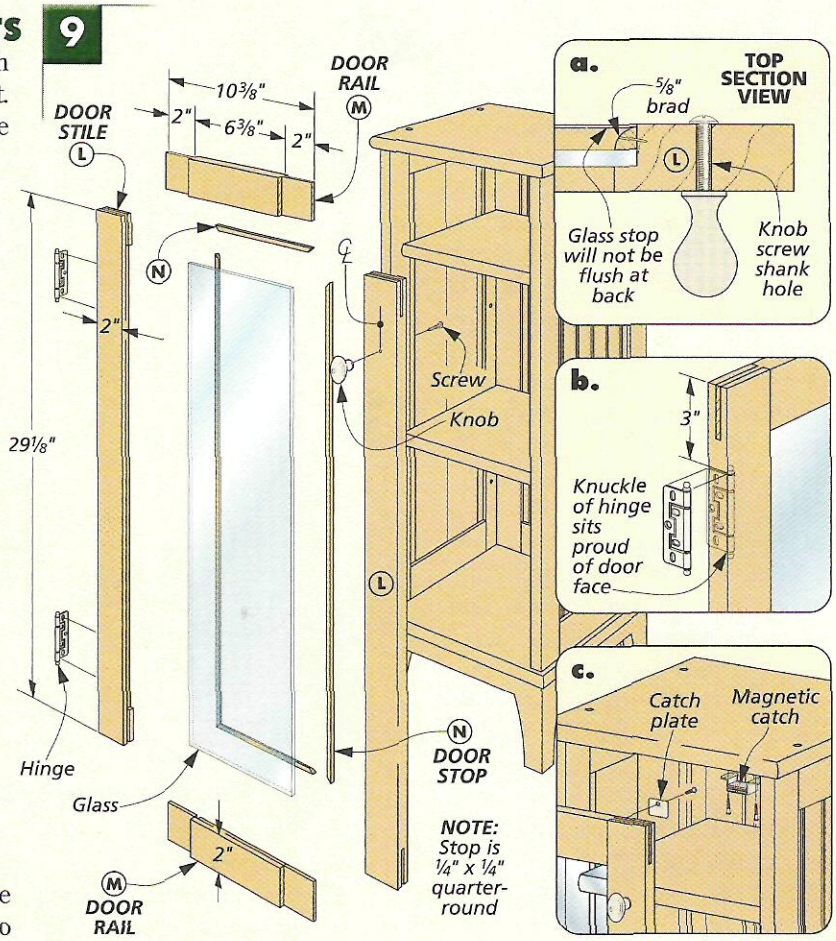

10

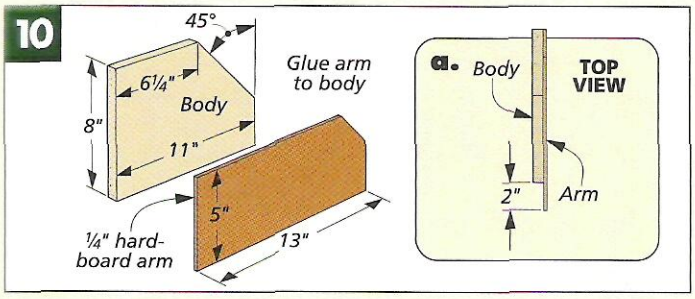

11

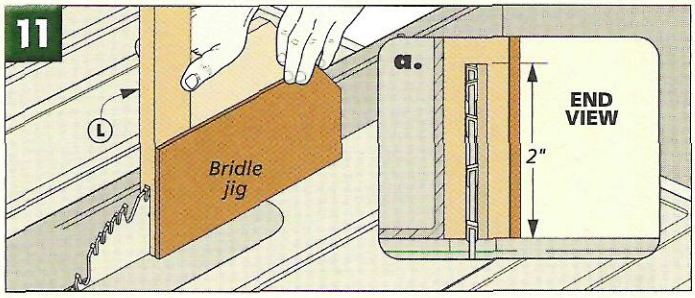

12

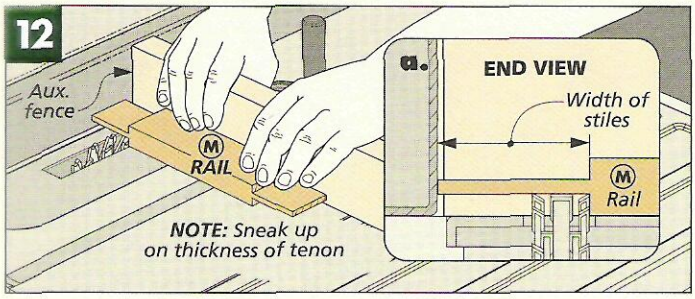

13

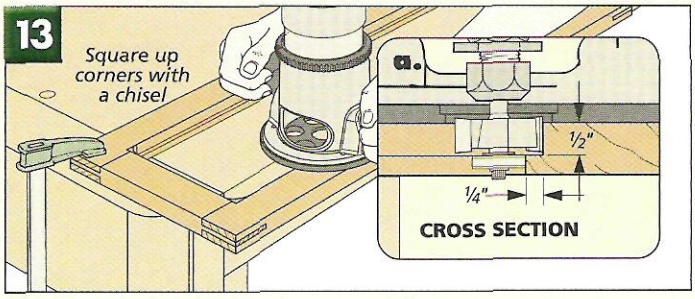

Building the Phone Pedestal

Topping off the cupboard is a phone pedestal. It's really just a half-size shelf supported above the case. There's a cutout in the back of the pedestal that lets you run cords for an answering machine out the back side.

SHAPING THE SIDES. Two sides and a back form an enclosure that support the top. The *sides (O)* have a curved detail cut in them, as in Fig. 14b. In order for the pieces to be identical, I taped the parts together to cut them on the band saw. Just be sure to stay to the waste side so that you can sand the curve smooth on a drum sander. Then a dado is cut near the back edge to hold the back, as shown in Fig. 14a.

FITTING THE BACK. The *back (P)* of the pedestal is made in two steps. First, a tongue is cut on each end to fit the dadoes in the sides. Next, cut a 1½"-radius opening at the bottom for the cords. The sides and back can then be glued together using a spacer in front to keep it square.

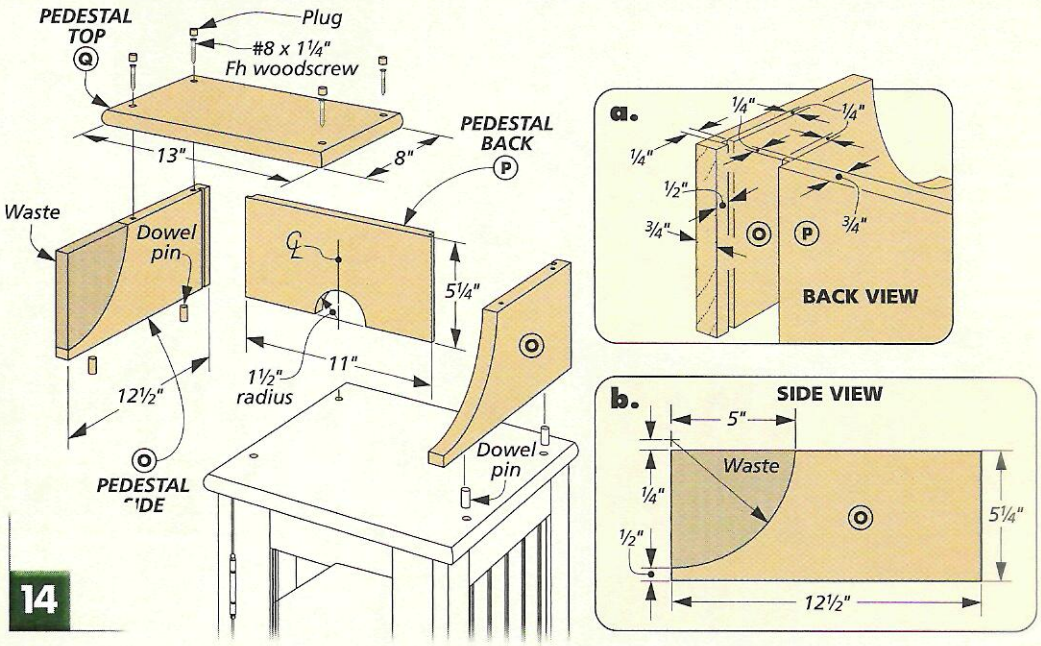

14

Now the *top (Q)* can be glued up from ¾"-thick stock. It gets the same bullnose treatment as the case top. Center the top on the pedestal base, mark and drill countersunk shank holes, and fasten it in place with screws. And to cover the screw heads, I added plugs that I cut from the same pine stock using a plug cutter in the drill press.

CONNECTING IT TO THE CASE. Finally, the phone pedestal is attached to the top of the case with dowels to keep it from sliding around. The hard part here was coming up with a way to accurately locate the dowel holes in the pedestal sides.

To solve this problem, I placed dowel centers in the counterbored holes in the top. I then centered the pedestal with the top and pressed the pedestal into the dowel centers. Once the dowel centers are removed, you can drill the holes and glue dowels into the pedestal. W

KITCHEN COUNTER CADDY

While making the phone stand, I figured the phone pedestal would be a great stand-alone project, like you see in the photo at right. It's a great organizer for all the things you'd keep near the phone: phone book, pen, paper, and calendar.

To make one, all you have to do is build the pedestal and a top from the case. And instead of joining it with dowels, I just screwed the base to the pedestal from the bottom and added some small rubber feet.

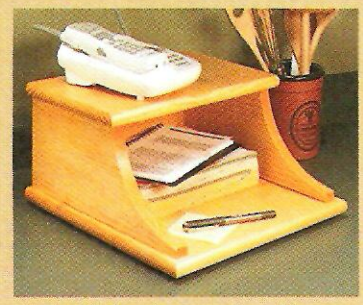

Build the phone pedestal by itself, and you can keep a telephone, phone book, and note pad close at hand just about anywhere in the house.

CUTTING DIAGRAM

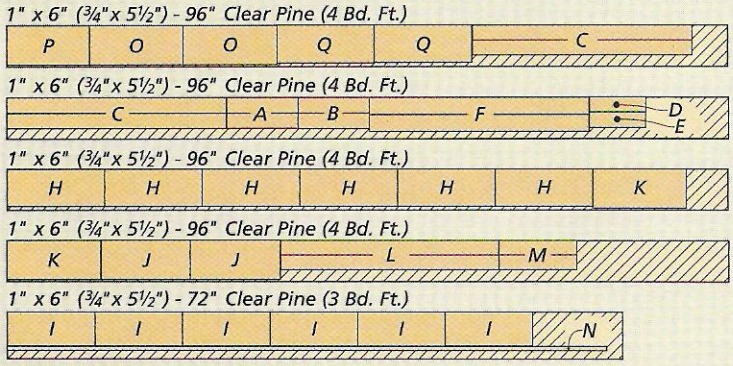

ALSO NEEDED: 25 linear feet of bead board and ⅛" hardboard for splines

For a country look, you can try an antique paint finish. To find out how, check out the article on page 14.

▲ *An antique milk paint finish can make a new project look like it was discovered in Grandma's attic.*

SHOP SECRETS REVEALED

ANTIQUE MILK PAINT FINISH

The pine cupboard on page 8 looks great with a simple, shellac finish. But I also wanted to try a really different type of finish here. This project is the perfect candidate for that slightly worn, antique paint effect you see in the photo at left. It's small (nice for painting), it has a variety of surfaces and edges, and it just has that old "farmhouse" feel to it. This finish certainly isn't for every project, but on this piece it shines.

THE ANTIQUE LOOK. Old, painted furniture usually didn't get painted just once. And often the original finish wasn't even paint. It might have started out with a stain and clear finish and then, when it began to look a little shabby, it got a coat of bright-colored paint. And through the years it got a few more coats of paint of one or more colors. Add some wear and tear to the mix and you end up with the finish shown at left.

You'll see a little bare wood here and there and in other spots you get a layered look, with one color showing under the other. (As the paint ages, it shrinks and starts to crackle and maybe chip off.)

MILK PAINT

To give my aged-paint finish a really authentic look, I decided to use the real McCoy — old-fashioned milk paint. (You can use flat latex paint and achieve a similar look.)

Before the days of pre-packaged paints, milk paint was often the only paint available locally. It was basically just a mixture of milk, lime, and pigments and could be mixed up whenever it was needed. Why milk? Well, the casein in the milk acts as a binder in the paint. And if you've ever tried to strip milk paint, you know how well it works.

Milk paint may be centuries old, but it still offers some nice advantages. First, it's fast drying — you can recoat in an hour or less. This is because it's water-based — it comes in a powder form and is mixed on the spot. It's also non-toxic and has little odor. And finally, it's available in a variety of bright colors. (See page 35 for milk paint sources.)

THE PROCESS

The techniques I used are really pretty basic, but the result is great. When you're all done here, you want people to admire the project and then ask whose attic it was hauled out of.

TRY A TEST. For me, the first step was a little experimenting. I wanted to know what I'd end up with before I jumped into it. So it certainly wouldn't hurt to work up a sample before you tackle the real project.

FIRST ADD SOME WEAR. An old, well-used piece of furniture has lost its crisp, new appearance long ago. So first you want to add a little bit of wear and tear. I didn't go overboard — no chains and hammers, just some coarse sandpaper.

Start by softening all the sharp edges and corners and then add some extra wear in spots. Just think about where the piece would normally show its age. The edges of the door and the frame around the door are good examples. And the feet would surely show a fair amount of wear. There's no formula for this.

Just use your imagination and you really can't go wrong.

NOW SEALER AND STAIN. Since milk-paint is water based, it will raise the grain of the wood. You can avoid this by starting out with a thin coat of shellac. This also allows you to use a quick-drying, water-based stain without worry.

The stain job doesn't need to be neat. I just brushed the stain on and didn't wipe it down. It's only there for another layer of color. A second coat of shellac will keep the stain from bleeding through the paint.

A LITTLE WAXING. Now that you're building up some "history" you need a way to expose it as you add more layers. Some paraffin wax does the trick. Just rub a few of the "wear" areas you've identified and the paint won't adhere. The edges of the side panels, around the base, the corners of the top and maybe a few random spots here and there. The area around the door knob is sure to show some good wear.

But don't get carried away. A little wax after the stain layer and a bit more after the milk paint undercoat will create a variety of "wear."

BRUSH ON THE PAINT. Now you can add some more "age" with a dark-colored milk paint. Milk paint is easy to use. Simply apply it with a foam brush. And don't worry too much about the quality of the paint job. Two "color coats" will easily hide the dark stain.

After a little more waxing, it took three coats of white to cover the dark blue basecoat. At this point, you'll start to notice some crackling on the surface. The paint might start to pull loose from the waxed areas. If you want a little smoother look, you can apply thinner coats with more drying time in between.

SAND IT OFF. After the final coat of paint is dry, you can begin to reveal the built-up "history." This is when your "old" piece comes to life.

With some medium-grit sandpaper, you don't need to rub hard to expose the different layers. Wherever there's a little wax, the paint will come off easily.

You can make use of all the layers and even take it down to bare wood in a few spots. But take it slow at this stage and step back to judge your progress as you work.

And did I mention that since milk paint dries so quickly, all this can be be completed in a weekend? Not bad for 100 years of age. W

Sandpaper. *The first step is to add a little wear and tear. Use some coarse sandpaper to knock off the sharp edges and add some "age" in the right spots.*

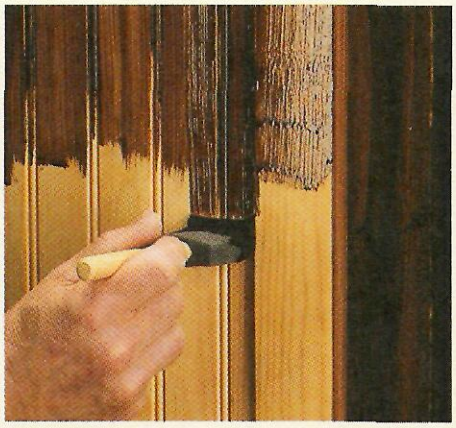

The Stain. *Now, start layering the finishes by brushing on a coat of water-based stain over a shellac sealer. Follow the stain with a second coat of shellac.*

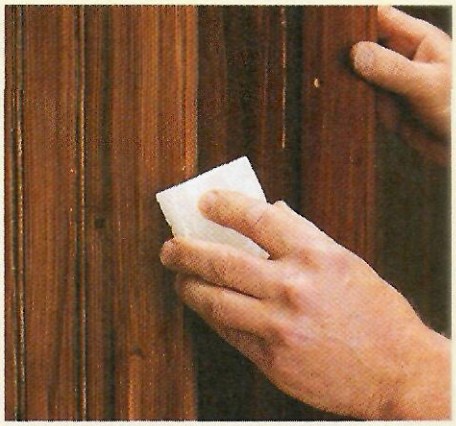

A Little Wax. *Next, a block of paraffin wax will help expose the layers later on. Just rub areas that would normally be worn and the paint to follow will sand off easily.*

Dark Basecoat. *After waxing, the first of two coats of "soldier blue" milk paint were applied. A cheap foam brush works fine and I made a quick job of it.*

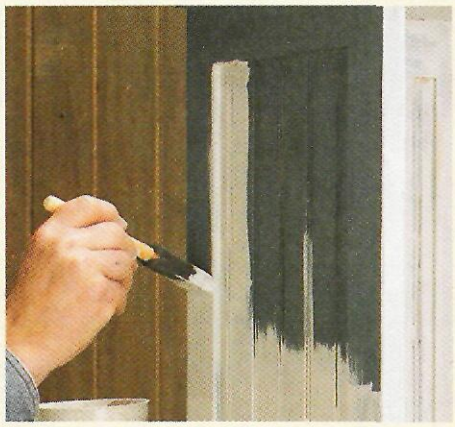

Topcoat. *A few more spots of wax over the blue paint and then the "oyster white" topcoats go on. At this point, you may start to see some crackling and peeling.*

Expose the Layers. *For the final step, some medium-grit sandpaper will easily loosen the paint on the waxed areas and reveal the "old" layers hiding underneath.*

CLASSIC COMPUTER CABINET

This home office hideaway easily holds all your high-tech computer hardware, and features some unique hardware of its own.

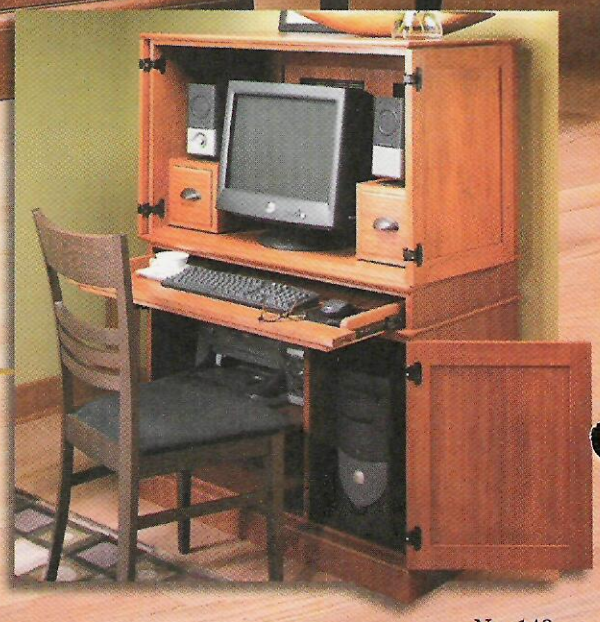

Construction Details

OVERALL DIMENSIONS:
38½"W x 23⅜"D x 55¼"H

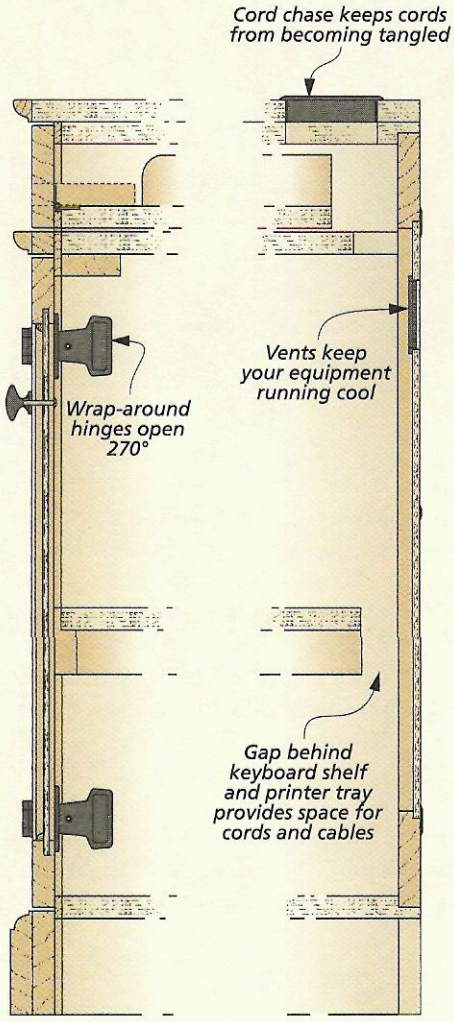

LOWER CABINET CROSS SECTION VIEW

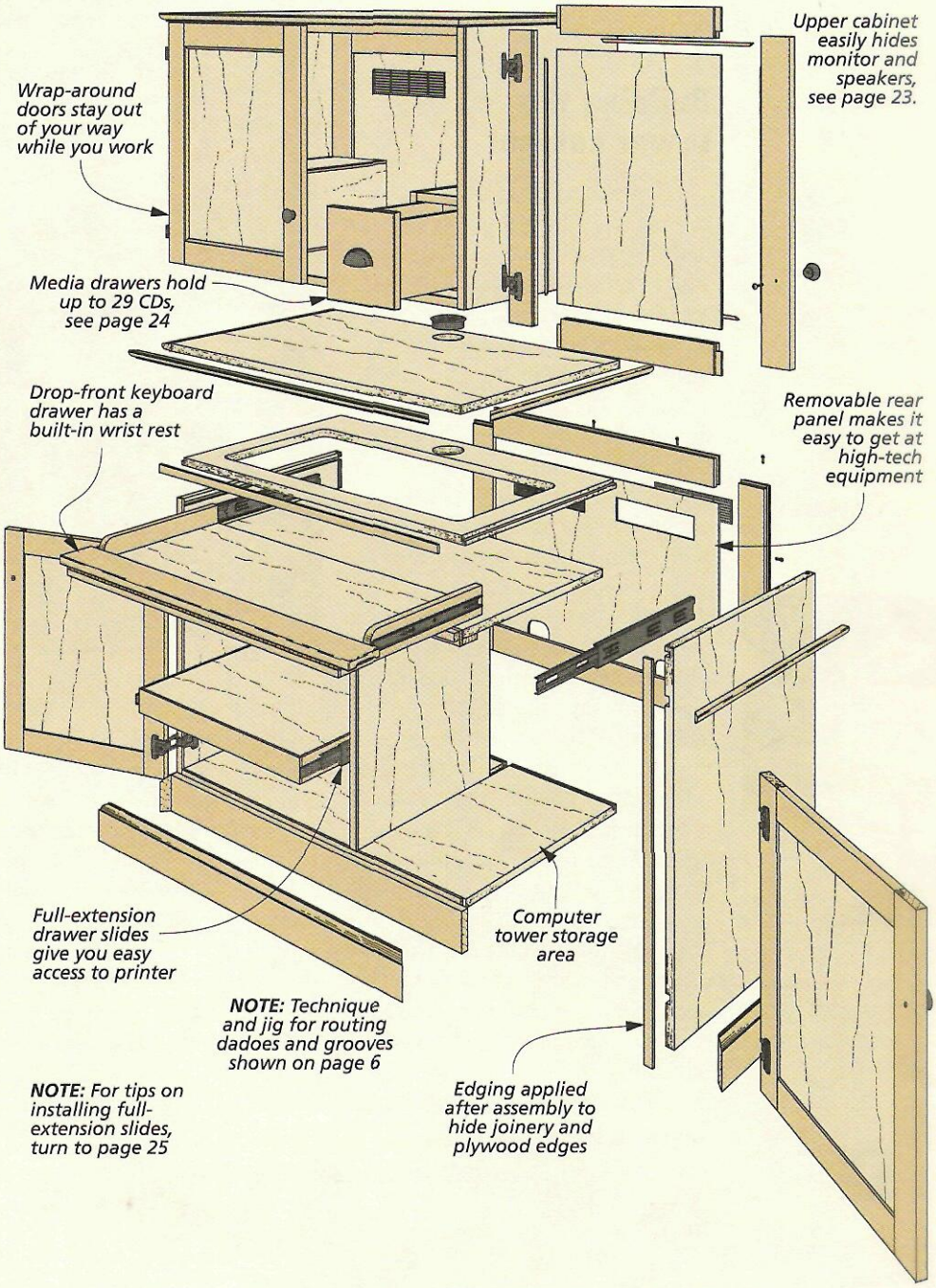

MATERIALS & SUPPLIES

A	Side (2)	¾ ply. - 21¾ x 30¼
B	Bottom (1)	¾ ply. - 21¾ x 36¼
C	Keyboard Shelf (1)	¾ ply. - 19½ x 36¼
D	Subtop (1)	¾ ply. - 21¾ x 36¼
E	Divider (1)	¾ ply. - 18¼ x 22½
F	Long Door Backer (1)	¾ x 2 - 22¾
G	Short Door Backer (1)	¾ x 2 - 12
H	Edging	¼ x ¾ - 155 rgh.
I	Wide Edging	¼ x 1½ - 36 rgh.
J	Frame Stiles (2)	¾ x 3¼ - 26¼
K	Frame Rails (2)	¾ x 3¼ - 30¼
L	Panel (1)	¼ ply. - 30¼ x 20¼
M	Printer Tray Top (1)	¾ ply. - 19¾ x 21¼
N	Printer Tray Sides (2)	¾ x 2¼ - 19¾
O	Printer Tray Front (1)	¾ x 2¼ - 21¾
P	Drawer Bottom (1)	¾ ply. - 18¾ x 33½
Q	Drawer Edging (1)	¼ x ¾ - 33½
R	Drawer Sides (2)	¾ x 2½ - 19
S	Drawer Front (1)	¾ x 3½ - 36¾
T	Skirt Filler (1)	¾ x 3½ - 37
U	Belt Filler (1)	¾ x ¾ - 37
V	Skirt Molding	¾ x 3½ - 87 rgh.
W	Belt Molding	¾ x ¾ - 87 rgh.
X	Top (1)	¾ ply. - 22¾ x 37
Y	Top Edging	¾ x ¾ - 87 rgh.
Z	Door Stiles (4)	¾ x 2¼ - 22
AA	Door Rails (4)	¾ x 2¼ - 14 13/16
BB	Door Panels (2)	¼ ply. - 14 13/16 x 18½
CC	Door Molding	¼ x ¼ - 126 rgh.

- (1 pr.) 16" Full-Extension Drawer Slide
- (1 pr.) 20" Full-Extension Drawer Slide
- (1) Piano Hinge - 1½" x 36"
- (2 pr.) 270° Aximat Hinges w/Screws
- (1) 3⅛"-dia. Plastic Grommet
- (2) 2⅝" x 10⅛" Plastic Vents
- (2) 1¼"-dia. Bronze Knobs w/Screws
- (8) Metal Turn buttons w/Screws

Building the Lower Cabinet

The lower portion of the computer cabinet can stand alone as a small desk, like you see in the photo at right. What's nice about this cabinet is it features some pretty straightforward plywood construction. But it's what's inside that really matters.

Under the top is a keyboard drawer with a built-in wrist rest. Behind the two doors, the space is divided into compartments to hold a computer and printer. There are also a couple other features to keep your components organized.

HIDING THE MESS. For one, there's a cord chase that runs from the top of the cabinet behind the keyboard shelf and into the lower cabinet. This keeps your cords from becoming a tangled "rat's nest" on the floor behind the cabinet. And a removable back panel gives you easy access to the back of the printer and computer for plugging and unplugging cords without straining.

BUILDING THE PLYWOOD CASE. The cabinet is made mostly of plywood. The benefit of using plywood is the ability to have wide, flat surfaces without gluing up panels. And you don't have to deal with wood movement.

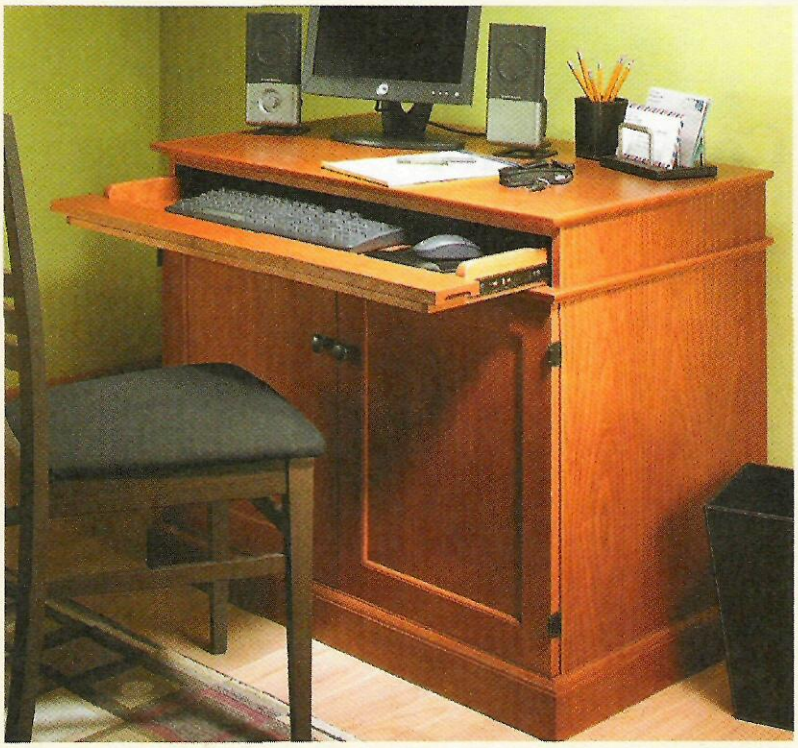

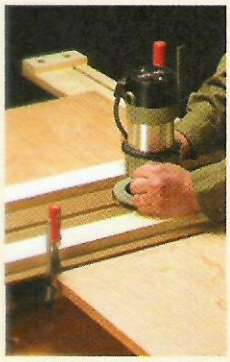

▲ *This jig makes routing accurate dadoes a simple job. See page 6 to make one.*

I began by cutting the *sides (A)* from 3/4" plywood. I then cut the joinery on the sides to hold the bottom, keyboard shelf and a subtop. The bottom and the divider are held by dadoes sized to fit 3/4" plywood.

To make sure the dadoes matched the plywood exactly, I used a jig and a hand-held router, as shown in the left margin photo. (To build the jig turn to page 6.) The dado that holds the subtop is routed in a single pass with a 3/8"-dia. straight bit (Figs. 1 and 1a). Then a rabbet is cut on the back edge of the sides. This will hold the rear frame and removable panel assembly.

Next the *bottom (B)* and *keyboard shelf (C)* are cut to size and receive a dado to fit a divider. The *subtop (D)* has a tongue cut on each end to fit the dadoes in the sides (Fig. 2). Here again, the subtop and bottom have a rabbet cut along the back edge for the rear panel, as in Fig. 1a.

The subtop also has two holes cut in it. The smaller hole is for the cord chase that connects the upper unit

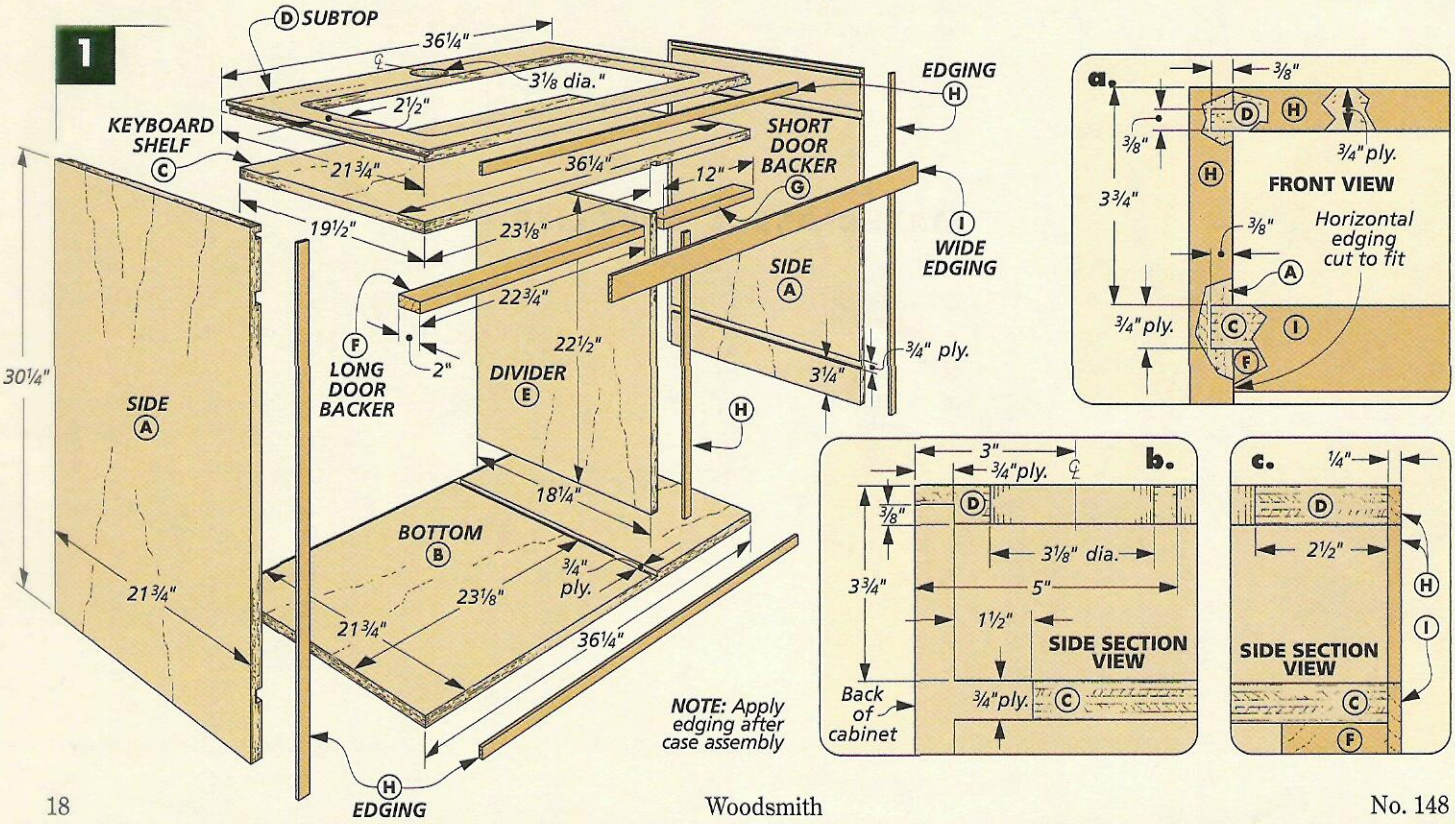

to the lower unit. It's cut with a 3"-dia. hole saw and then sanded to final size (3⅛"), as shown in Fig. 1b. The larger cutout will be needed for installing the drawer slides in the keyboard drawer, as in Fig. 3.

The next part to cut is the *vertical divider (E)* for the case. This panel divides the storage area. At this point, the case can be glued together. Once the case is assembled, two *door backers (F, G)* are cut from ¾"-thick hardwood and glued to the underside of the keyboard shelf. These just back up the overlay doors that are built later.

HIDING PLYWOOD'S UGLY EDGE. The only problem with plywood construction is dealing with the exposed edges. So I attached hardwood *edging (H, I)* to hide them.

The vertical edging is applied first, then the horizontal edging is cut to fit. And a wide piece is applied across the keyboard shelf and door backers (Fig. 1a). Then the edging can be trimmed with a router and a flush trim bit, as shown in Fig. 4. I squared up the corners where the router couldn't reach with a chisel.

EASY ACCESS REAR FRAME. That takes care of the work on the front of the case. To complete the back, you'll need to build a frame to fit the opening in the back of the case. This frame holds a plywood panel that is easily removed to gain access to the computer equipment, as in Fig. 5.

The frame *stiles (J)* and *rails (K)* are joined with simple rabbets, as you can see in Fig. 5a. The rabbets are sized to match a piece of ¼" plywood. Once the frame is glued together, it can then be glued into the rabbets in the back of the case.

REMOVABLE PANEL. Next I cut a ¼" plywood *panel (L)* to fit inside the rear frame. This panel has four openings — two along the bottom for power cords and two near the top for a pair of press-fit vents. Metal turn buttons hold the panel in place.

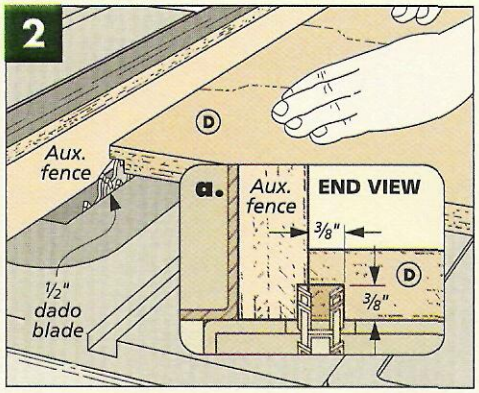

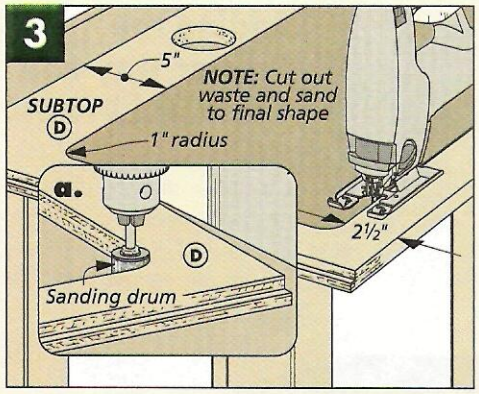

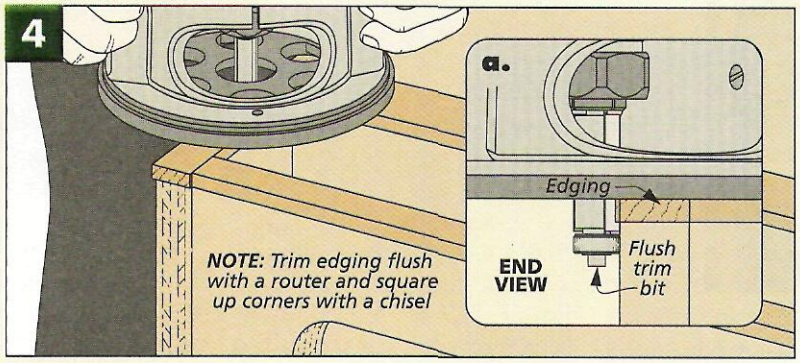

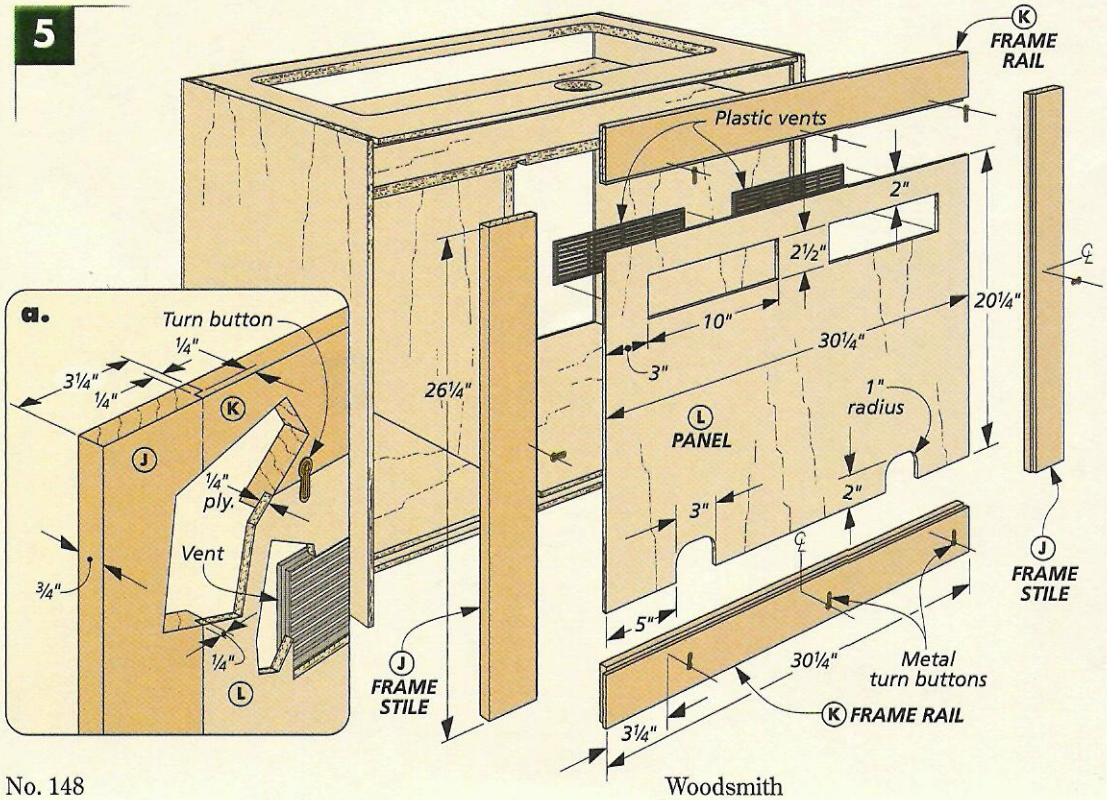

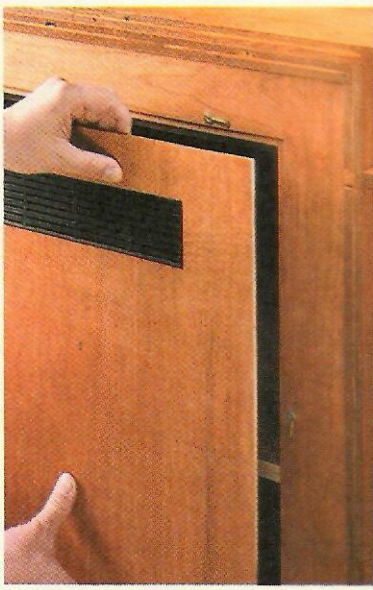

▲ *A removable panel makes it easy to get to the back of the equipment stored inside.*

Adding the Printer Tray and Keyboard Drawer

With the case complete, there are still a couple things to build for the inside of the cabinet — a slide-out printer tray and a keyboard drawer.

SLIDE OUT PRINTER TRAY. The printer tray is really just a shelf mounted on a pair of full-extension drawer slides. As you can see in Fig. 6, it's just a plywood top that's wrapped with a solid wood front and sides.

First the *tray top (M)* is cut to size from 3/4" plywood and then the two *tray sides (N)* and the *tray front (O)* are cut to size from 3/4"-thick stock. Now the front and sides get a rabbet along one edge to match the thickness of the tray top (Fig. 6). And after the ends of the front are rabbetted (Fig. 6a), the tray can then be glued together. You'll find details on mounting the slides on page 25.

▲ *Full-extension slides make it easy to get to the printer. For more on installing slides see page 25.*

DROP-FRONT KEYBOARD DRAWER. The keyboard drawer is similar to the printer tray, but there's one important difference. The front of the drawer is hinged to fall inward when the drawer is pulled out and serves as a wrist rest while typing, as illustrated in Fig. 7a.

To build the keyboard drawer, start by cutting the plywood *drawer bottom (P)* to size. Then *edging (Q)* is applied to the front (Fig. 7). The *drawer sides (R)* can now be cut and rabbeted to hold the bottom. But before gluing the sides to the bottom, they need some cutouts (Fig. 8). These cutouts make room for the drawer front to lay flat (Fig. 7a).

Next, you'll need to cut a shallow rabbet across the front of the bottom to accommodate a piano hinge. It's sized for the full thickness of the hinge and Fig. 9a shows the details. A tall, auxiliary fence adds a little extra support while making the cut.

Now the *drawer front (S)* can be cut from 3/4"-thick stock. It's sized to

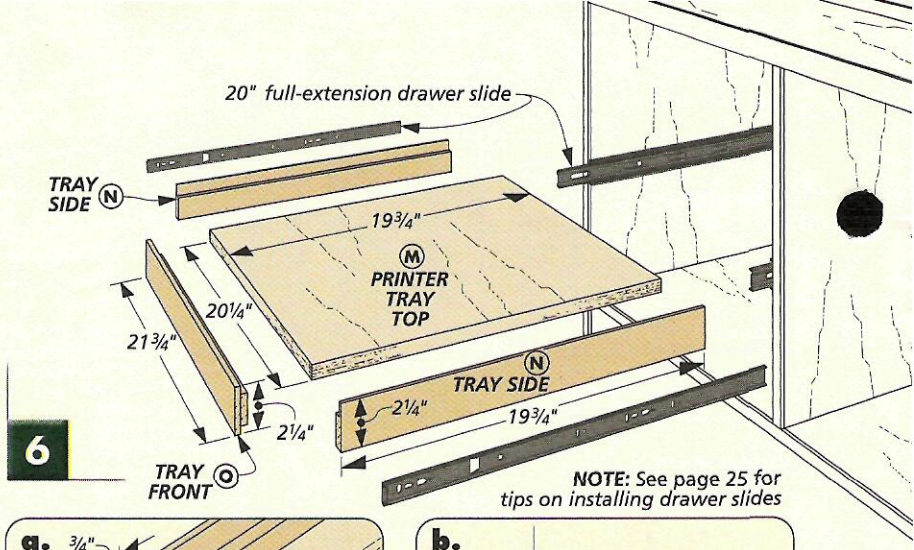

6

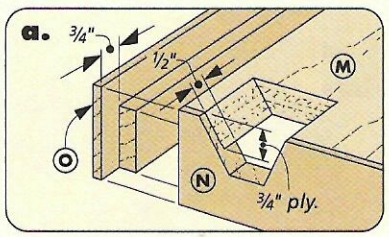

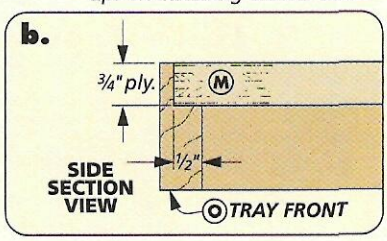

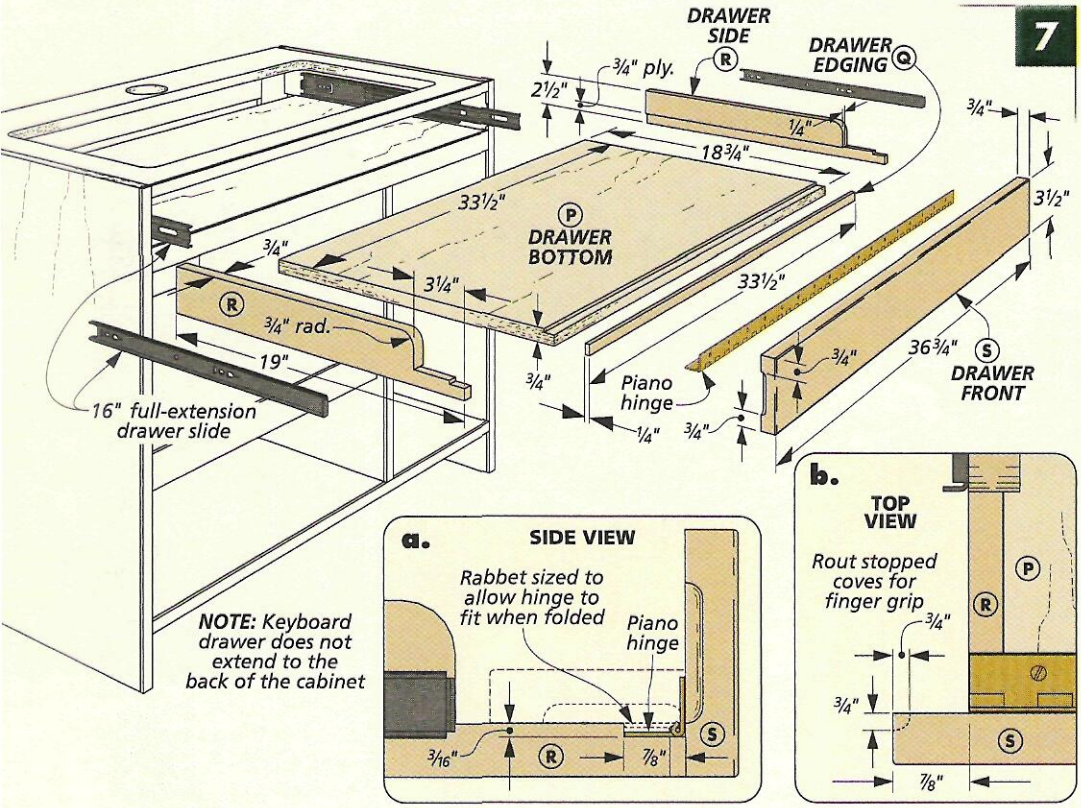

7

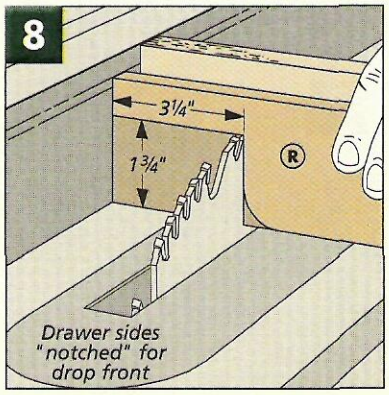

8

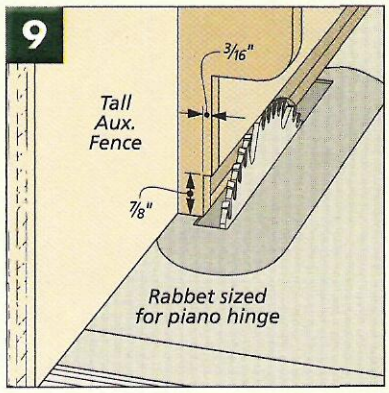

9

overlap the the front of the case. And instead of adding a drawer pull (it would get in the way when typing), I just routed stopped coves in the ends of the front to make "fingerpulls." Now the drawer front can be hinged to the drawer.

Finally, the drawer is mounted to the case with full-extension slides. This is where the large opening in the subtop will come in handy.

INSTALL THE MOLDING

To dress up the case, I added some skirt and belt molding, as in Fig. 10. But before installing the molding, you'll need to add filler strips to the front of the case so the molding stands proud when the doors are attached. A wide *skirt filler (T)* is fitted across the bottom and a narrow *belt filler (U)* strip is attached to the front of the keyboard shelf, as in Fig. 10c.

The *skirt molding (V)* and the *belt molding (W)* have a similar profile. The main difference is the width. Because the belt moldings are narrow, it's best to rout the profile on an extra-wide blank and then rip it to final width (Fig. 11). When both moldings are completed, they're mitered to fit and glued in place.

ADD DECORATIVE FINISH TOP. Now you can add the plywood *top (X)*. The edging for the top has the same profile as the belt molding. But here I found it was easier to glue the blanks onto the top and then rout the profile at the router table.

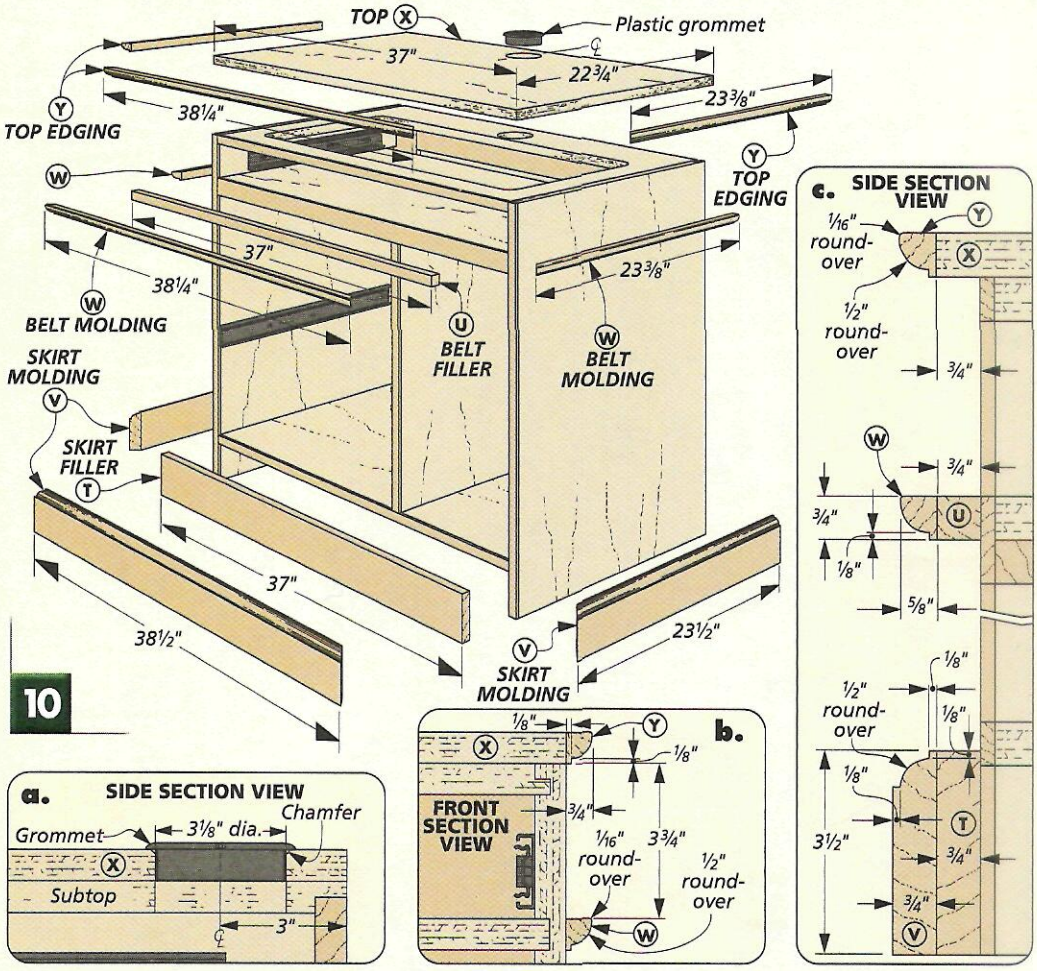

The last thing to do is to cut a hole in the top for a plastic grommet to run cords through (Fig. 10a). Like on the subtop, the hole can be roughed out with a hole saw. Then to get the two holes to match up, I glued the top in place and trimmed the hole to final size with a router and flush trim bit. A chamfer around the top keeps the grommet from chipping the plywood veneer.

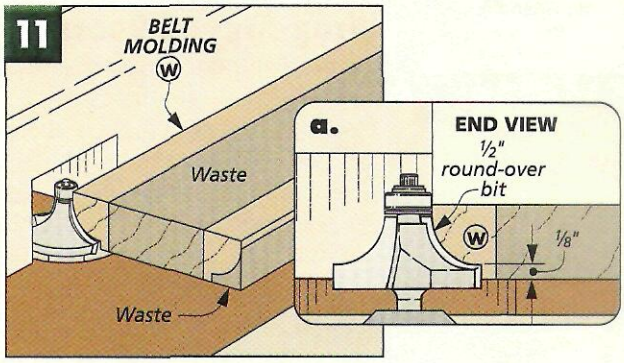

CUTTING DIAGRAM

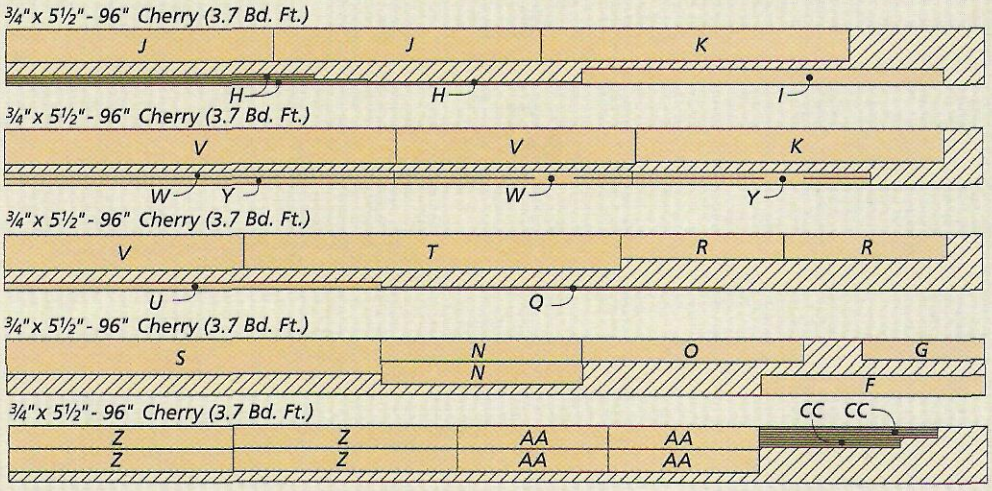

ALSO NEEDED: Two 48"x 96" sheets of ¾" cherry plywood and one 48"x 48" sheet of ¼" cherry plywood

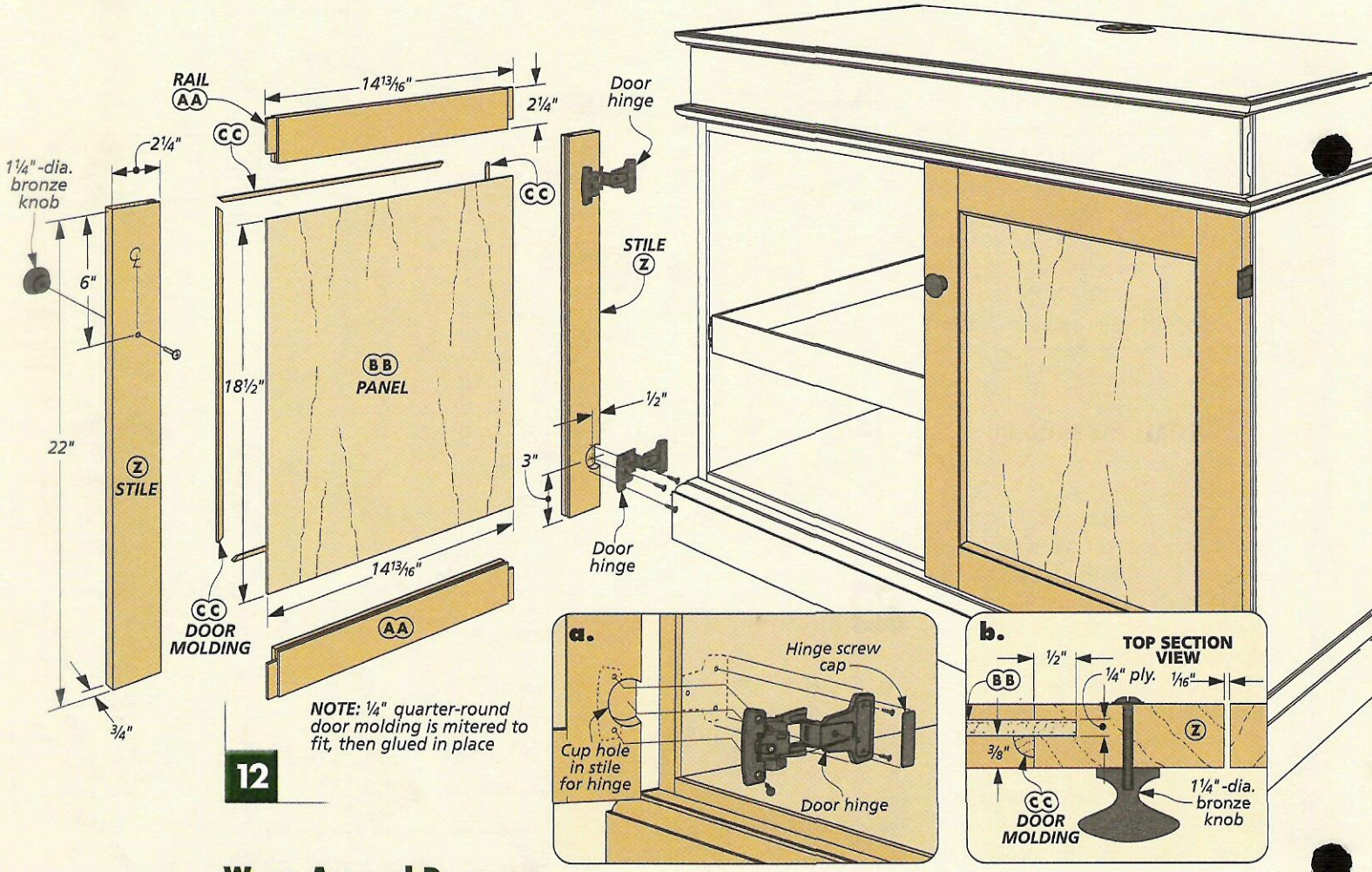

12

Wrap-Around Doors

▲ *A support block prevents chipout when drilling the hinge cup hole.*

To complete the lower cabinet, I built a pair of overlay doors that fit between the belt molding and the skirt molding. I sized them to leave a 1/8" clearance at the top and bottom and a 1/16" clearance in the middle (Fig. 12b).

MAKING OFF-CENTER GROOVES. The doors are built with stub tenon and groove joints, as you can see in Fig. 12. Ordinarily, I'd cut centered grooves in the stiles and rails by just flipping the workpiece end for end. But since I wanted to add some molding to the front of the doors to dress them up a bit, the grooves (and tenons) will need to be cut slightly off center.

To do this, start by setting the rip fence 3/8" from the blade and make the first pass in the *door stiles (Z)* and *rails (AA)*. Then sneak up on the final size of the groove (Fig. 13).

CUTTING STUB TENONS. Once the grooves are cut, the rails need matching stub tenons (Figs. 14 and 14a). And after the joinery is complete, cut the 1/4" plywood *door panels (BB)* and glue up the doors.

With the doors assembled, the last detail is to add the molding. The quarter-round *door molding (CC)* is mitered to fit around the inside of the door frames (Fig. 12). Again, it's best to use an oversized blank.

WRAP-AROUND HINGES. The doors are attached to the cabinet with two-piece, 270° hinges. One piece just screws to the inside of the cabinet, but the other requires a cup hole to be drilled in the stile (Fig. 12a).

To drill the cup hole, you'll need a 35mm-dia. bit. And since the edge of the hole runs off the stile, I used a support block. Now all that's left is to add the knobs to the doors. W

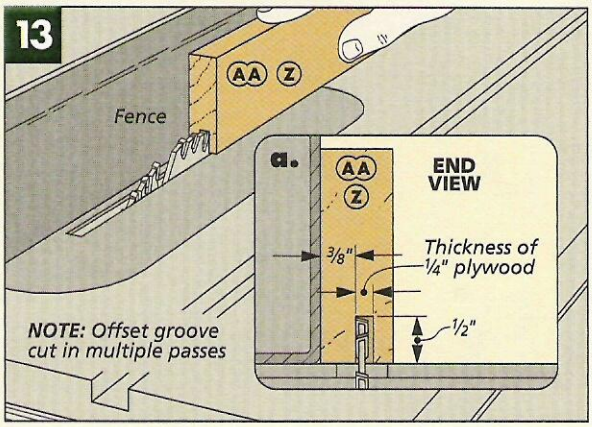

13

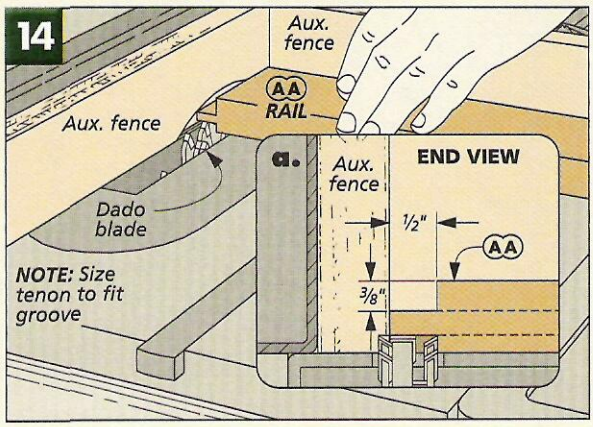

14

Upper Cabinet

Keep your office out of sight. This cabinet easily hides a monitor and more.

The lower desk is great for keeping a computer, printer, keyboard, and other equipment organized and out of sight. But the monitor and speakers are still sitting out in the open. To hide them, I built the upper cabinet shown in the photo.

The cabinet is large enough to hold a 21" monitor. Then to keep all the software and games from taking over, I built a pair of CD cases. As you can see, they also make great stands for the speakers. To build the cases, turn to page 24.

SIMPLER CONSTRUCTION. The upper cabinet uses much of the same joinery as the lower cabinet. As you can see in Fig. 1, there aren't any internal dividers. But since there are a lot fewer parts, it's easier to build.

Before the case is assembled, you'll need to drill a hole for the monitor and speaker cords in the bottom of the case to match the holes that were cut in the lower cabinet, as in Fig 1. Here again, the hole is cut out with a hole saw and trimmed to final size with a handheld router and a flush trim bit.

Once the cabinet is assembled, you can apply the edging and then trim it flush with a router. The next step is to build a rear frame for the back. After gluing the frame in place, I cut a plywood panel to fit the opening. But this time, you only need to cut two holes for the vents.

To complete the case, I built another top and a pair of doors. The top has an edging profile to match the molding on the lower cabinet. And the only difference in the doors is that they're smaller.

ATTACHING THE UPPER CABINET. When the upper cabinet was complete, it can be set it on top of the lower cabinet. But I noticed that it could slide around pretty easily.

To keep it from moving, I installed threaded inserts in the lower cabinet and drilled countersunk holes in the upper cabinet. Now the cabinets can be fastened together with machine screws. W

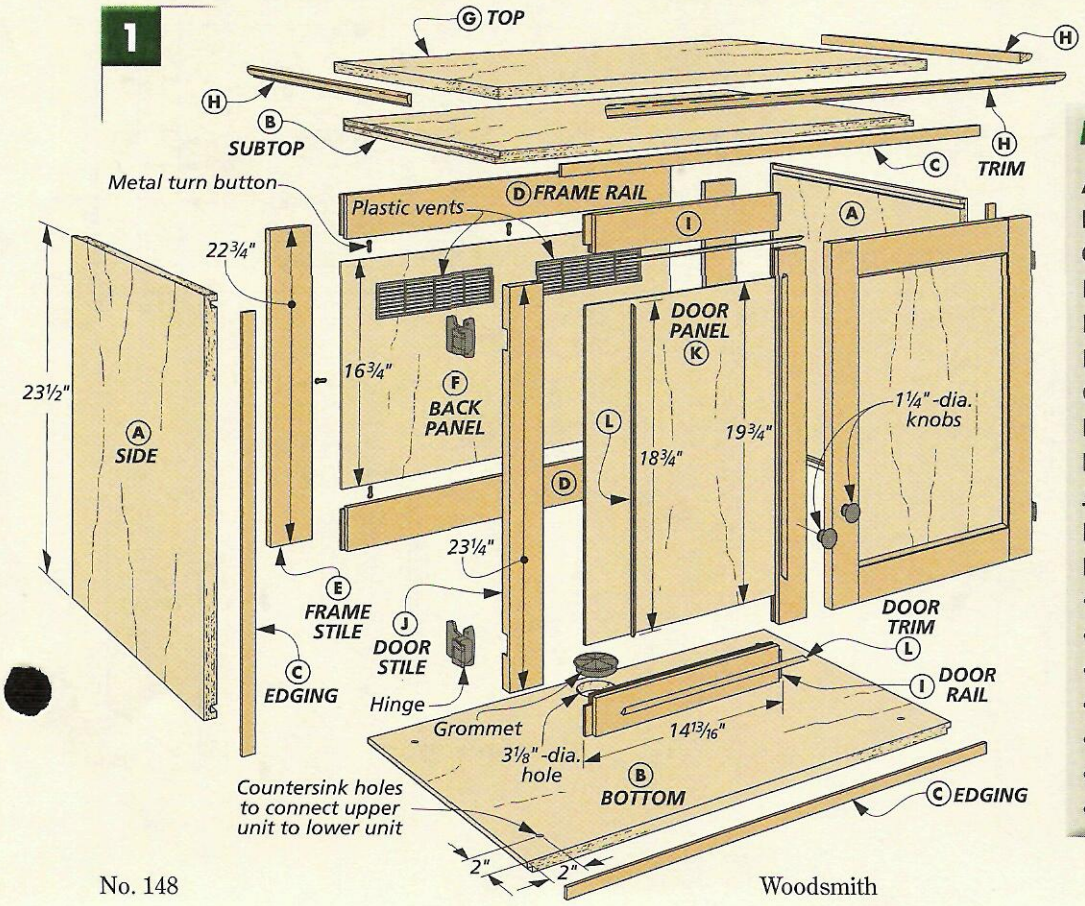

MATERIALS & SUPPLIES

A	Side (2)	¾ ply. - 21¾ x 23½
B	Bottom/Subtop (2)	¾ ply. - 21¾ x 36¼
C	Edging (2)	¼ x ¾ - 60 rgh.
D	Frame Rail (2)	¾ x 3¼ - 30¼
E	Frame Stile (2)	¾ x 3¼ - 22¾
F	Back Panel (1)	¼ ply. - 30¼ x 16¾
G	Top (1)	¾ ply. - 22¾ x 37
H	Trim	¾ x ⅝ - 86 rgh.
I	Door Rail (4)	¾ x 2¼ - 14¹³⁄₁₆
J	Door Stile (4)	¾ x 2¼ - 23¼
K	Door Panel (2)	¼ ply. - 14¹³⁄₁₆ x 19¾
L	Door Trim	¼ x ¼ - 140 rgh.

- (2 pr.) Aximat 270° Hinges w/Screws
- (1) 3⅛"-dia. Grommet
- (2) 1¼"-dia. Knobs w/Screws
- (2) 2⅝" x 10" Plastic Vents
- (8) Metal Turn buttons w/Screws
- (4) ¼"-20 Brass Threaded Inserts
- (4) ¼"-20 x 1¼" Machine Screws

CD Case

This go anywhere, easy-to-build drawer holds 29 CDs.

In my house, CDs have a knack for taking over a desk. To get them organized and within easy reach, I built a pair of CD cases for the computer cabinet. But you could put these little drawers to use anywhere. And as you can see in Fig. 1, the drawers are pretty simple to build.

START WITH PLYWOOD CASE. I began building the case by cutting out two *sides (A)*, and a *top* and *bottom (B)* from 3/4" plywood. Next, a dado is cut on the back of the parts to hold a 1/4" plywood back. Then *edging (C)* is applied to the long edges of the side pieces and trimmed flush.

The case is joined by cutting a groove along the top and bottom edges of the sides. Then a matching tongue is cut on the top and bottom pieces, as shown in Fig. 1b. Now the *back (D)* can be cut to fit and the case glued up. To complete the case, apply edging to the front and trim it flush.

BUILDING THE DRAWER. The drawer is made from 1/2"-thick hardwood. A nice feature of the drawers is that the back is recessed (Fig. 1a). This way, you can get to the back of the drawer without pulling it all the way out.

The *sides (E)*, *front*, and *back (F)* have a groove along the bottom edge to hold a 1/4" plywood *bottom (G)*, as in Fig. 1a. A tongue and dado joint connects the front to the sides. The back fits into a dado, as in Fig. 1c.

Don't worry about the groove for the bottom showing at the front of the drawer. That's because a *false front (H)* is cut to match the size of the drawer. After a quarter-round profile is routed on the false front, all that's left to do is attach the cup pull and start filling the drawer with CDs.

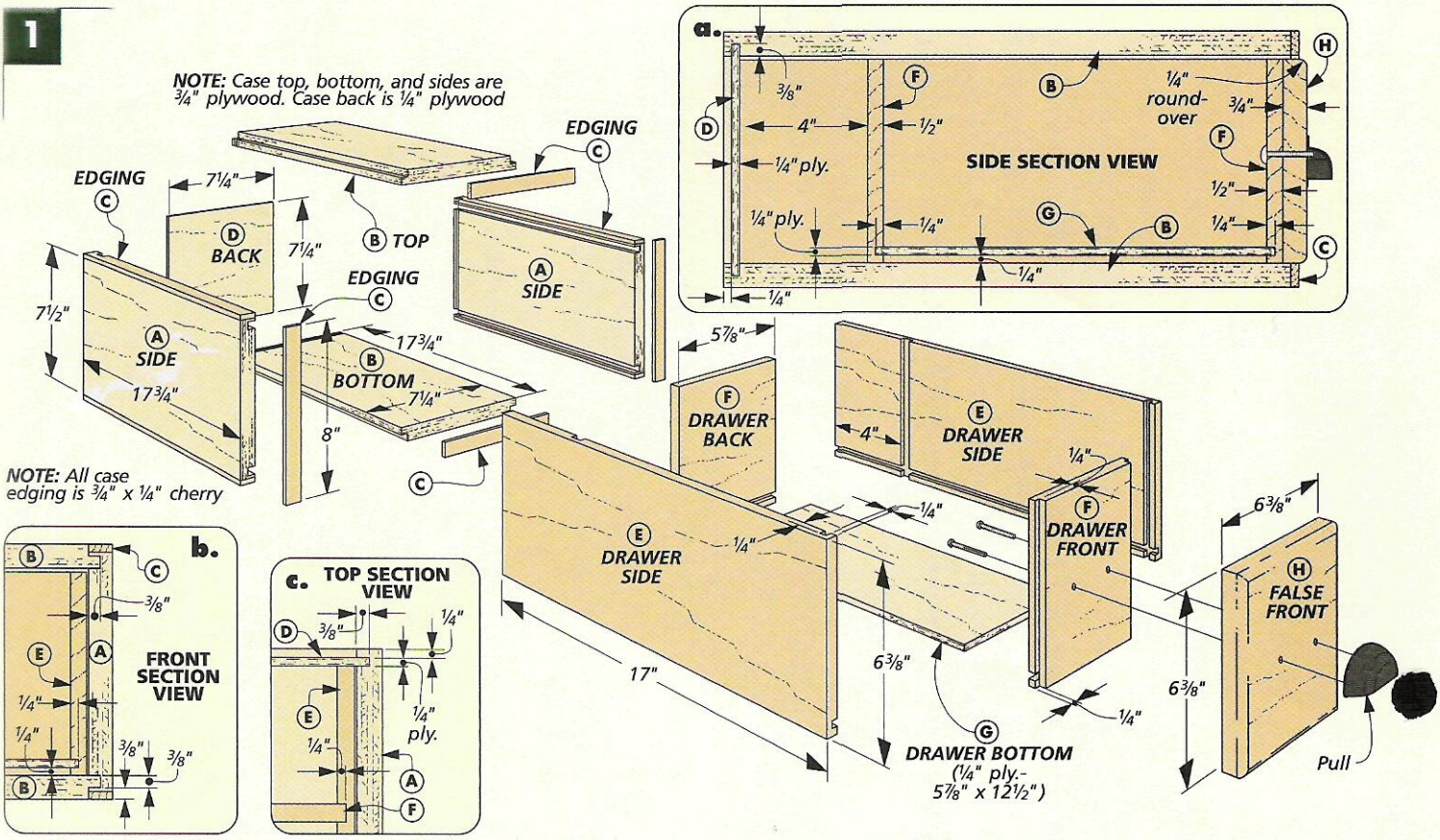

SHOP NOTES

Installing Full-Extension Slides

The keyboard drawer and the printer tray in the computer desk are sure to get a workout. So to allow full access to the components and to give a lifetime of trouble-free operation, I used heavy-duty slides.

THE SLIDES. The key to these slides is the installation, but once you know how they work, it's easy.

Full-extension slides come as a single unit but they're actually two halves. By extending the slide, you can release a small clip that holds the wide, cabinet half to the narrow, drawer half. This allows you to install the two halves separately.

Now each half has a confusing number of screw holes (Fig. 1). Some are round, some vertically slotted and some horizontally slotted. These are important. During the installation, screws through the slotted holes allow you to make minor adjustments to the location of the slides. Then screws through the round holes lock them down.

And finally if you look at Fig. 2, you'll see that these slides take up a bit of space in the cabinet. You need to have ½" of clearance on each side of the drawer.

PRINTER TRAY. The installation of the printer tray is pretty simple. Since it "floats" in the lower cabinet, the height isn't critical. And the front of the tray sits flush with the front of the case, so that's right where the ends of the slides need to go (Figs. 3a and 3b).

CABINET. I like to install the cabinet half of the slide first. Using a plywood spacer as shown in the photo, you can easily install them right on the money.

For this half of the slide, start with the horizontally-slotted holes. You'll have to slide the runner out to get access as shown in Fig. 3. The special screws (shown in the margin) can be driven without a pilot hole.

TRAY. The tray half of the slide is just centered on the width of the side. Here you want to use the vertically slotted holes (Fig. 3b).

Once both halves are installed, slide the tray into place and make your adjustments. Finally, add screws to both halves through the round holes.

KEYBOARD DRAWER. The keyboard drawer follows the same procedure, only the location is a little different. Here, you'll need to recess the slides in the cabinet flush with the ends of the cutouts on the sides of the drawer. Figs. 4 and 4a give you the details. The slotted holes will allow you to get the drawer front perfectly spaced in its opening.

▲ *These special screws have a wide, flat head and can be installed without a pilot hole.*

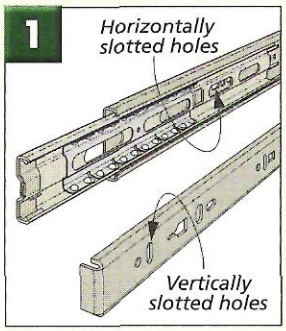

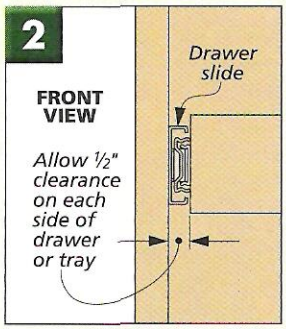

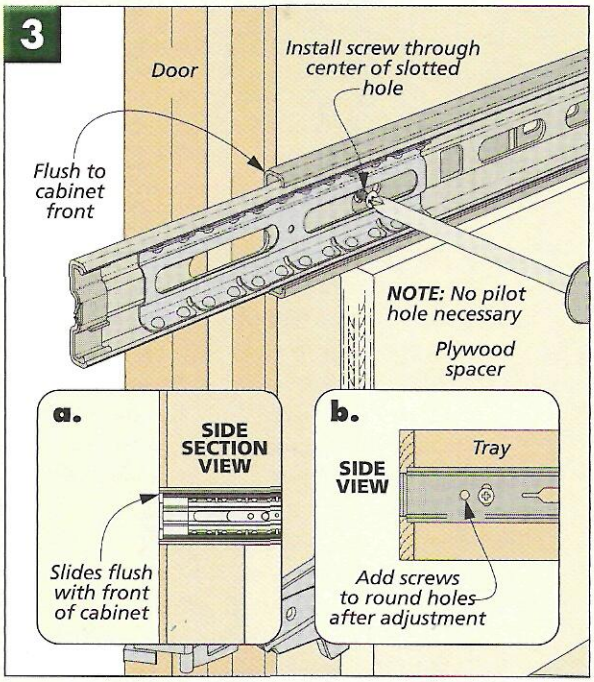

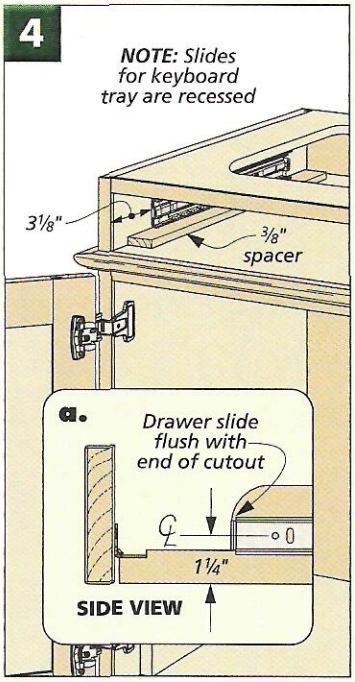

NINE-DRAWER DRESSER

With its clean lines and straightforward joinery, this dresser has a great look and is easy to build.

If simplicity of design is a virtue, this cherry dresser was made in heaven. At first glance you might see some Shaker influence or possibly a little Craftsman style at work. Both styles share the same simple lines and smooth flat surfaces that you see here. But this project doesn't copy, it only borrows a bit. And all the elements, from the dyed top, base, and knobs, to the symmetry of the drawers, come together to make this a unique and striking piece of furniture.

And there's a second treat here that's not so apparent. Not only is the look clean and uncluttered, but the plywood construction makes building this project a pleasant task.

First, I didn't try to hide the dado joinery in the plywood case. This simplifies the case construction and I think it adds interest to the piece.

The base is just standard mortise and tenon joinery. Nothing difficult here. And the nine drawers go together quickly with an easy locking rabbet joint. Basic joinery? Sure. But also solid and meant to last.

And if you'd like to throw in just a few more curves, take a look at the dresser with the optional top and base on the opposite page.

What more could you ask for? A great-looking project that goes together easily and will provide lots of storage. It's all right here.

Construction Details

OVERALL DIMENSIONS:
51¼"W x 21¾"D x 34¾"H

Top is glued up from ¾" cherry

Top

Horizontal Divider

Vertical dividers are captured in full dadoes

¼" cherry edging

NOTE: Plywood is edged before joinery is cut

Drawers are constructed with locking rabbet joints

Drawer Side

Case Side

NOTE: Drawer fronts are solid cherry. The sides and backs are soft maple

Corner Block

Case sides and dividers are ¾" plywood

NOTE: Top, base, and knobs are dyed dark cherry before adding to case

Cleat

Front base rail has a gentle curve

Screws through corner blocks and cleats fasten base to case

Base legs and rails are joined with mortise and tenon

Exposed tongue and dado joins case sides and dividers

Cherry knobs dyed dark cherry

Legs stand ¼" proud of case

Legs chamfered top and bottom

Woodsmith GO ON-LINE EXTRAS

If you would like to build the optional top and base for the dresser, you can download instructions at **www.woodsmith.com**

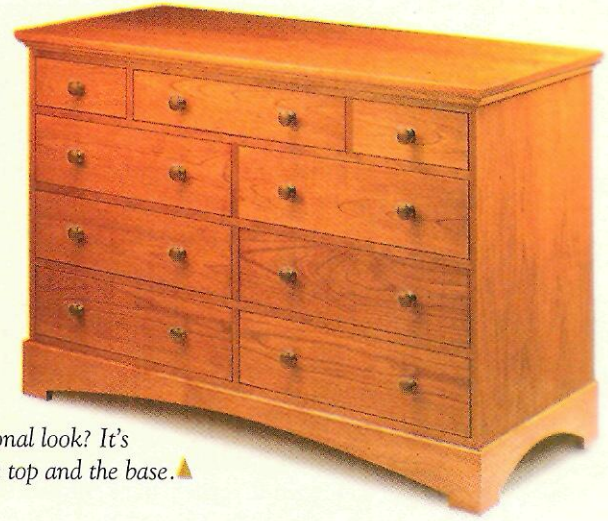

Want a more traditional look? It's easy. Just change the top and the base.

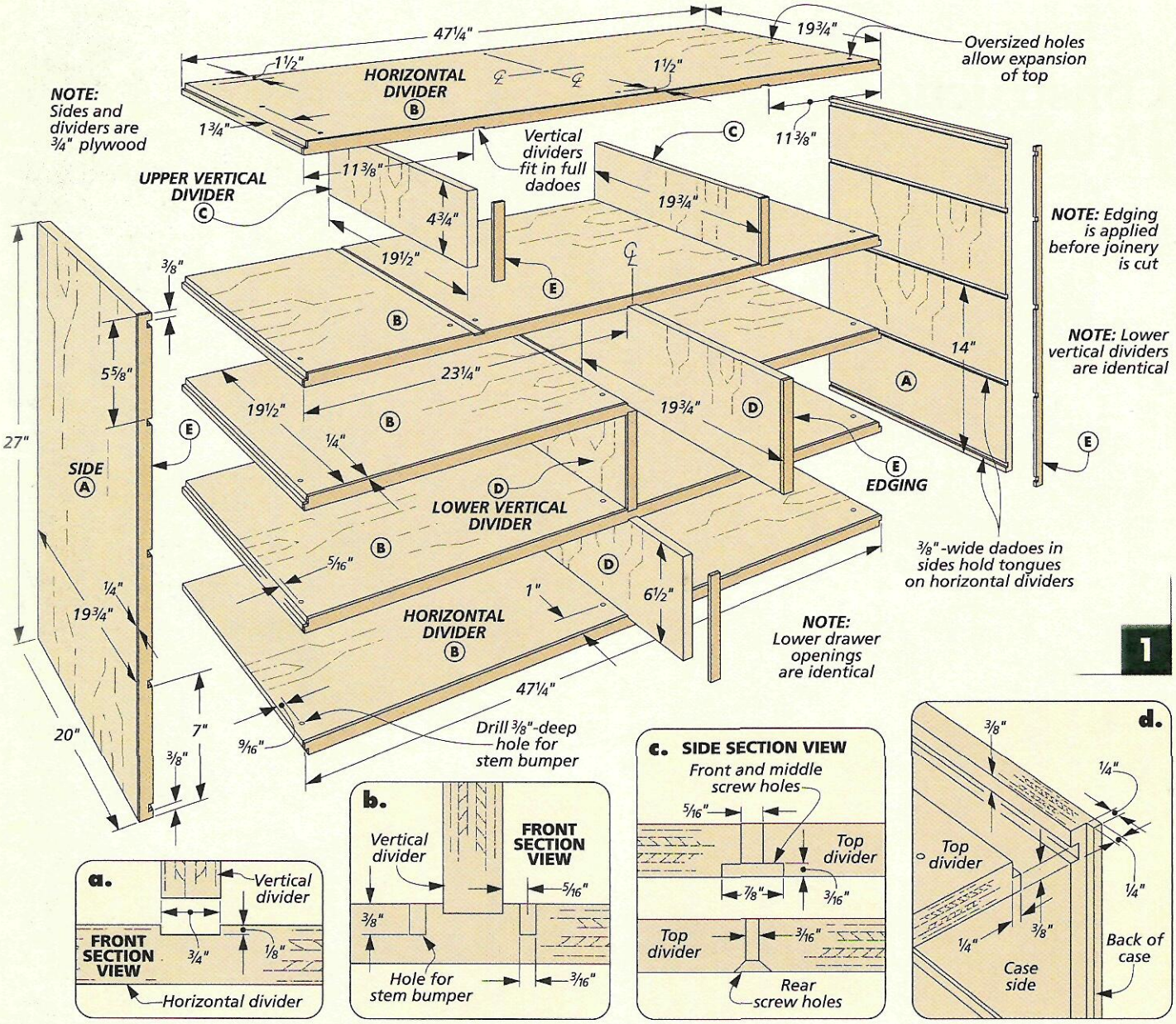

1

Plywood Case

The logical place to start on the dresser is with the large plywood case. All the joinery here is pretty straightforward. As you can see in Fig. 1, I didn't make any effort to hide the dado joinery. The important thing is to size the case accurately so fitting the drawers later on will go smoothly.

EDGING. The first task is to cut the two *sides (A)* and five identical *horizontal dividers (B)* to size from ¾" plywood. Next cut one oversized piece of ¾" plywood for all five vertical dividers. Now, you can get busy applying the ¼" cherry edging (see article on facing page).

JOINERY. Once the edging is applied and trimmed, you can start work on cutting the joinery. The dadoes in the side panels come first and a table saw with a dado blade is the best way to accomplish this job.

I set up to cut the two end dadoes first (Fig. 1d). The spacing is identical. You just want the dividers to end up flush with the ends of the sides.

For the remaining three dividers, you can use a test piece to get the spacing right (Fig. 1).

HORIZONTAL DIVIDERS. After rabbeting the sides for the ¼" plywood back, I turned my attention to the horizontal dividers. First, tongues are cut on the ends of the dividers to fit the dadoes in the sides (Fig. 1d). All the joinery is exposed here, so you'll want to shoot for a tight fit.

To complete the horizontal dividers you'll need to cut the dadoes that hold the vertical dividers (Fig. 1a). Long panels like this can be a challenge to run through the table saw, so routing the dadoes can be a better option. The article on page 6 shows a simple jig for routing dadoes.

HOLES. At this point the joinery is complete, but before assembling the case there are some holes to drill. First, holes for the stem bumper guides (Figs. 1 and 1b). Next, drill two different-sized holes in the top divider for fastening the top to the case (Figs. 1 and 1c).

ASSEMBLY. Now the case is ready for glue. After assembling the sides and horizontal dividers, I cut the *upper (C)* and *lower vertical dividers (D)* to size and glued them in place. (See page 30 for assembly tips.)

PERFECT EDGING

With just a few simple techniques you can apply seamless edging to plywood.

The only drawback I've ever found to using plywood in a project is that sometimes you have to hide the edges. It's really just a two-step process — first you glue the edging on and then you trim it flush. But there are a few tricks that make adding edging to your plywood a much easier job.

GLUING EDGING. There's no great secret to gluing on the edging, just a couple of simple techniques. First, I start with slightly oversized strips — both in length and width. An extra 1/8" in width and 1/2" in length gives you a little fudge factor to work with (Fig. 1).

And whenever possible I like to "gang-up" on my edging (Fig. 1). It's easier to edge one large panel and then cut smaller pieces from it.

The final piece in the puzzle is good clamping pressure. The simple answer to this problem is to use a wide caul, as shown in Figs. 2 and 2a. The caul distributes the pressure more evenly over the length of the edging. You can use fewer clamps and still get an "invisible" glueline.

TRIMMING EDGING. After the edging is applied, it needs to be trimmed flush with the panel. You can go about this in a couple of different ways.

The photo at right and Fig. 3 show the "high-tech" method. Two panels clamped together with a spacer in between will provide a solid surface for a router with a flush trim bit. I just trim the inside face of each panel and then turn both panels "inside out" to trim the second face.

The lower right boxes show an easy "low-tech" method I like to use for small jobs.

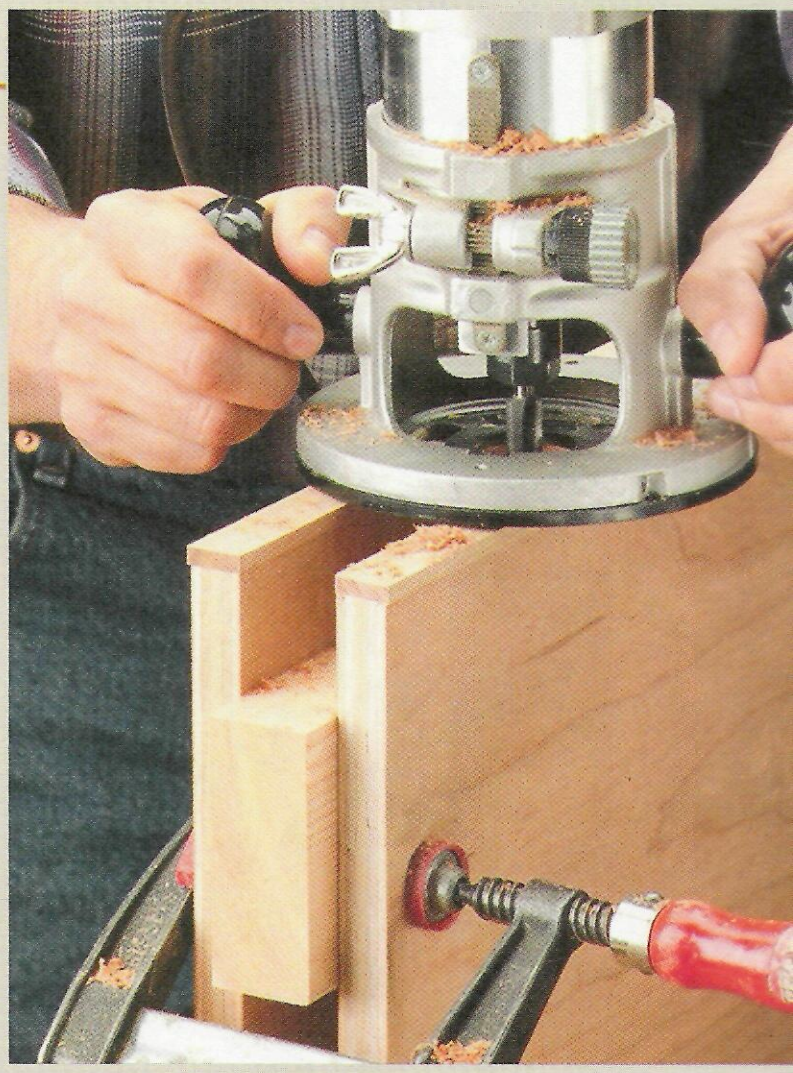

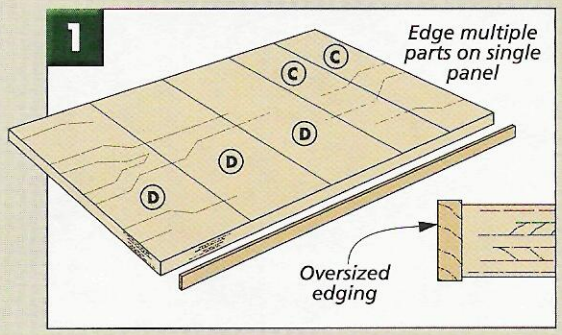

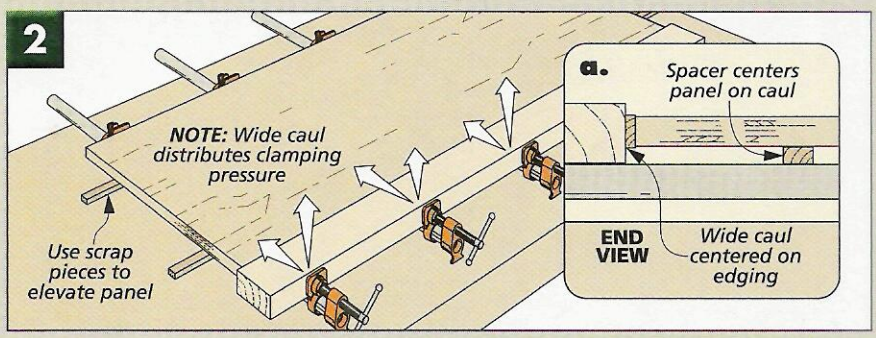

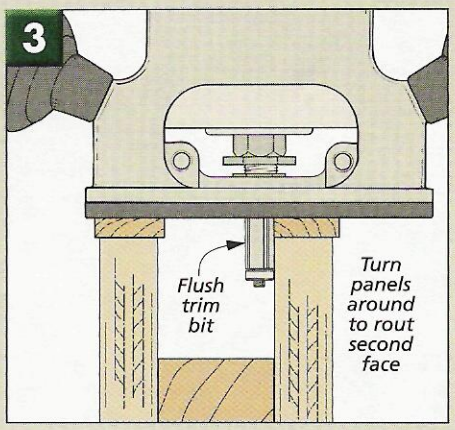

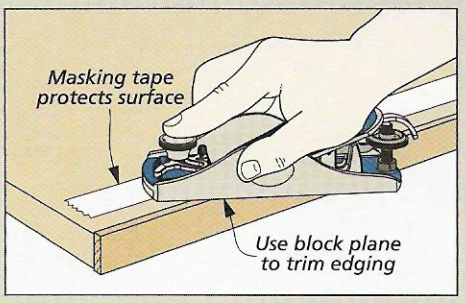

Hand Plane. *A block plane followed by sandpaper can be an easy way to trim edging. With masking tape protecting the panel, plane almost flush to the surface.*

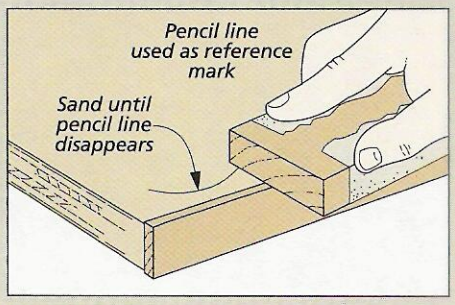

Sand It Flush. *Now switch to a sanding block to complete the job. When a light pencil line on the surface of the panel disappears, you know you've hit the mark.*

Easy Case Assembly

Large cases can sometimes be a bear to assemble. But fortunately there are simple ways to make the job go a whole lot smoother.

DRY FIT. First, always dry fit and clamp before you spread the glue. This way you can avoid any big surprises.

SMALL BITES. And whenever possible, I glue up a case in stages. This takes a little longer but it still gets the job done. (On the dresser I glued one side of the case at a time and added the vertical dividers last — see photo at right.)

LONG CLAMPS. If you're like me, you never have enough long clamps. The good news is that you can work around this. When you double-up pipe clamps or use clamping cleats, you can "stretch" short clamps and still get the job done.

BOWED CAULS. A slightly bowed caul can apply good pressure where a clamp can't reach. I use this trick all the time. It's a great way to pull a tight fitting dado joint together along its entire length.

DIVIDERS LAST. The photo at right shows the vertical dividers being added after the main case is assembled. As you can see, I added some temporary spacers between the horizontal dividers. This helped me get accurate measurements. And then to ease the fit of the dividers, I chamfered their back edges. It won't show and allows them to slide into place a lot easier.

CHECKING FOR SQUARE. When you clamp a case the parts often bow, so don't rely on a square.

The easiest way to check for square is with a corner-to-corner outside measurement. But you don't need to measure the whole case. Measuring an inside opening will also work as well. W

▲ *Slow-set glues can make glue-ups a bit more leisurely.*

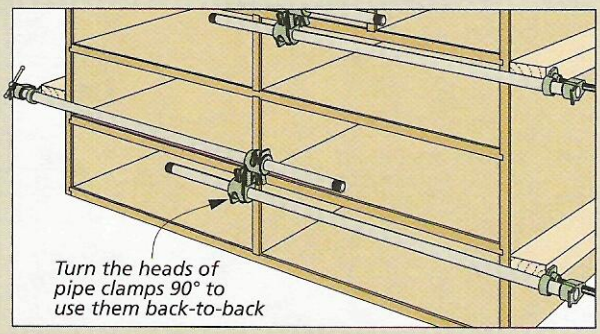

Double-up Clamps. *Two shorter pipe clamps can be used back-to-back to span a greater length.*

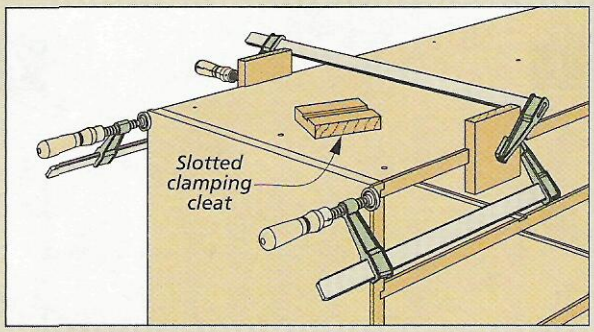

Clamping Cleats. *Cleats clamped across a panel can provide a solid surface for clamps to pull against.*

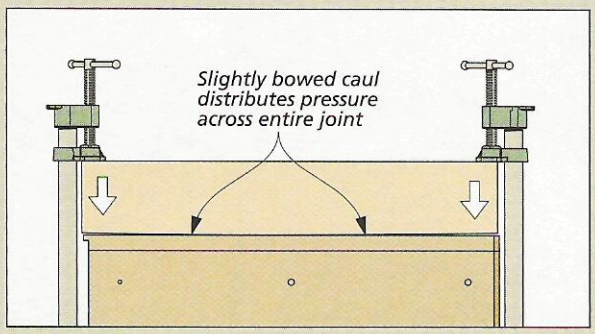

Bowed Cauls. *A thick, bowed caul will apply pressure across the "unreachable" center of a wide panel.*

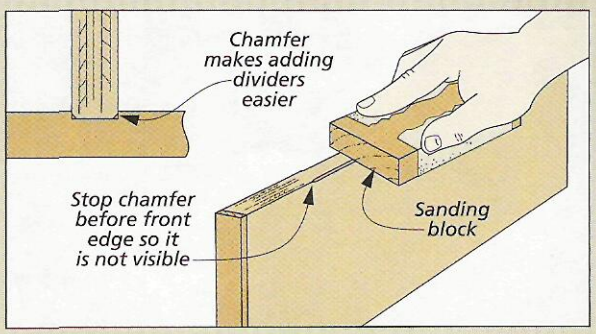

Ease Edges. *If you chamfer the top and bottom edges of the dividers, they'll slide into place much easier.*

Build The Base

With the plywood case assembled, I next turned to the simple base that it sits on. As you can see in Fig. 2, it's really nothing more than four short legs and four rails that are joined with a mortise and tenon. Some corner blocks and a couple cleats round it out. The base is sized to sit just a bit proud of the case and the front rail has a gentle curve.

LEGS. I started by cutting the *four legs (F)* to size from 1¾"-thick stock. Next come the ¼"-wide mortises in the legs. Fig. 2a gives you the basics. All four legs are identical and the mortises are positioned so that the legs end up ⅛" proud of the rails (Fig. 2b).

After you've cut the mortises, the legs are completed with a small ⅛" chamfer on all the bottom edges and the two top outside edges as shown in Fig. 2b. Nothing fancy — it just softens the look and will keep the bottoms from chipping.

RAILS. With the legs ready to go, the rails come next. Once the two *side rails (G)* and the *front* and *back rails (H)* are cut to size from ¾"-thick stock, the centered tenons are a quick job for a table saw and a dado blade. All the tenons are identical, so the set-up is simple (Fig. 2a).

CUTTING THE CURVE. Once the tenons are cut, you can add the gentle curve to the front rail. To draw the curve I turned to a method I've used a number of times before. You can bend a thin strip of ¼" hardboard between a couple stop blocks to act as a "pattern." This will create a smooth curve with no guesswork. After the curve is drawn, you can do the rest at the band saw.

GLUE UP. There's one final detail before glue-up — a 1/16" chamfer on the outside edges of all the rails. The assembly is routine. Just make sure that the base is square for a good fit to the case.

CORNER BLOCKS. Adding the *corner blocks (I)* and *cleats (J)* completes the base (Figs. 2 and 2b). The corner blocks add reinforcement but mainly provide a way to fasten the base to the case as shown in Fig. 3.

Once the base is completed, don't get in a hurry to attach it to the case. You'll want to dye it first. (See margin box.) And when you do fasten the two together, you'll find it's a lot easier to do this upside down as shown in Fig. 3. Just pay attention to the overhang (Fig. 3a).

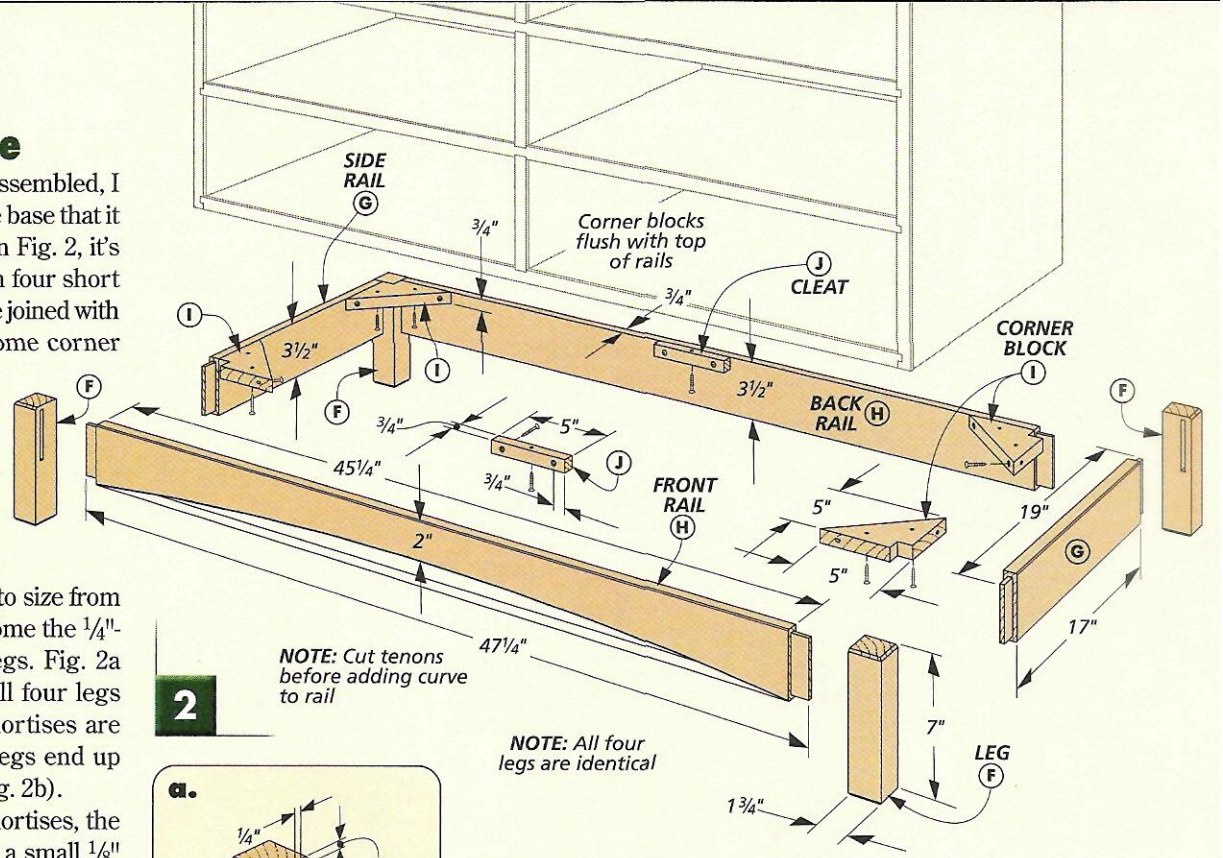

2

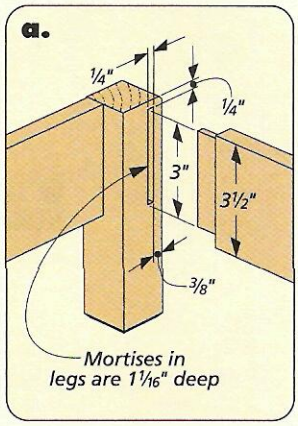

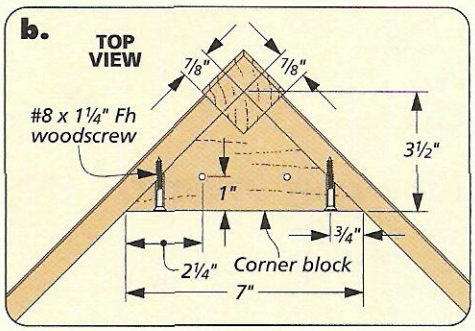

Water-Based Aniline Dye for Cherry

To 12 ounces of water add 2 tsp. of *Moser's Natural Antique Cherry*, ½ tsp. *Cherry Amber Maple* and ½ tsp. *Dark Red Mahogany.*

3

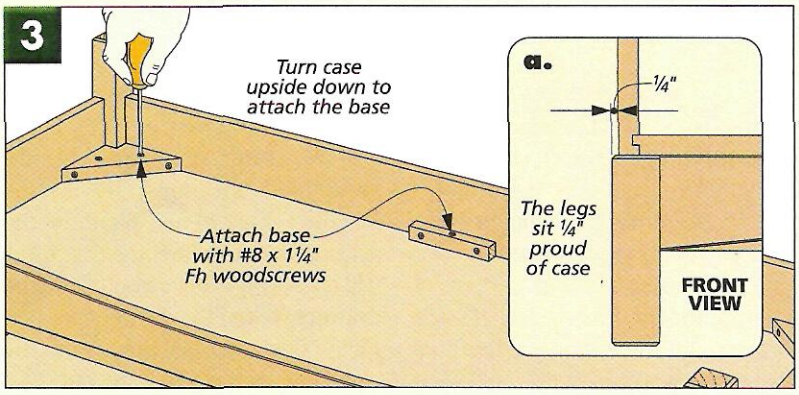

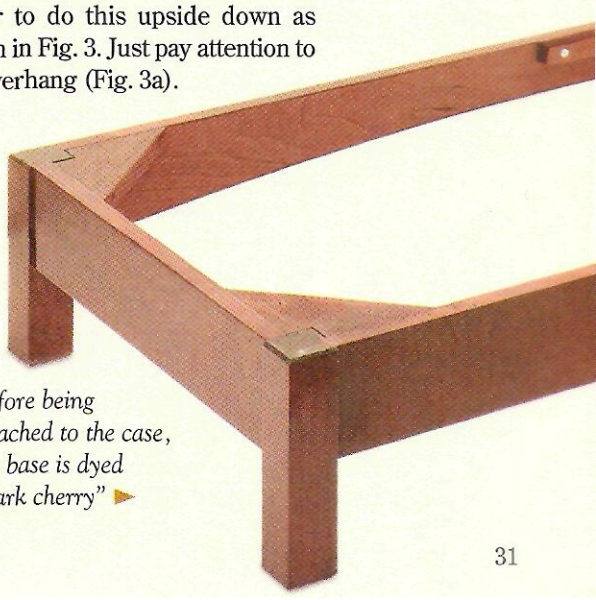

Before being attached to the case, the base is dyed "dark cherry" ►

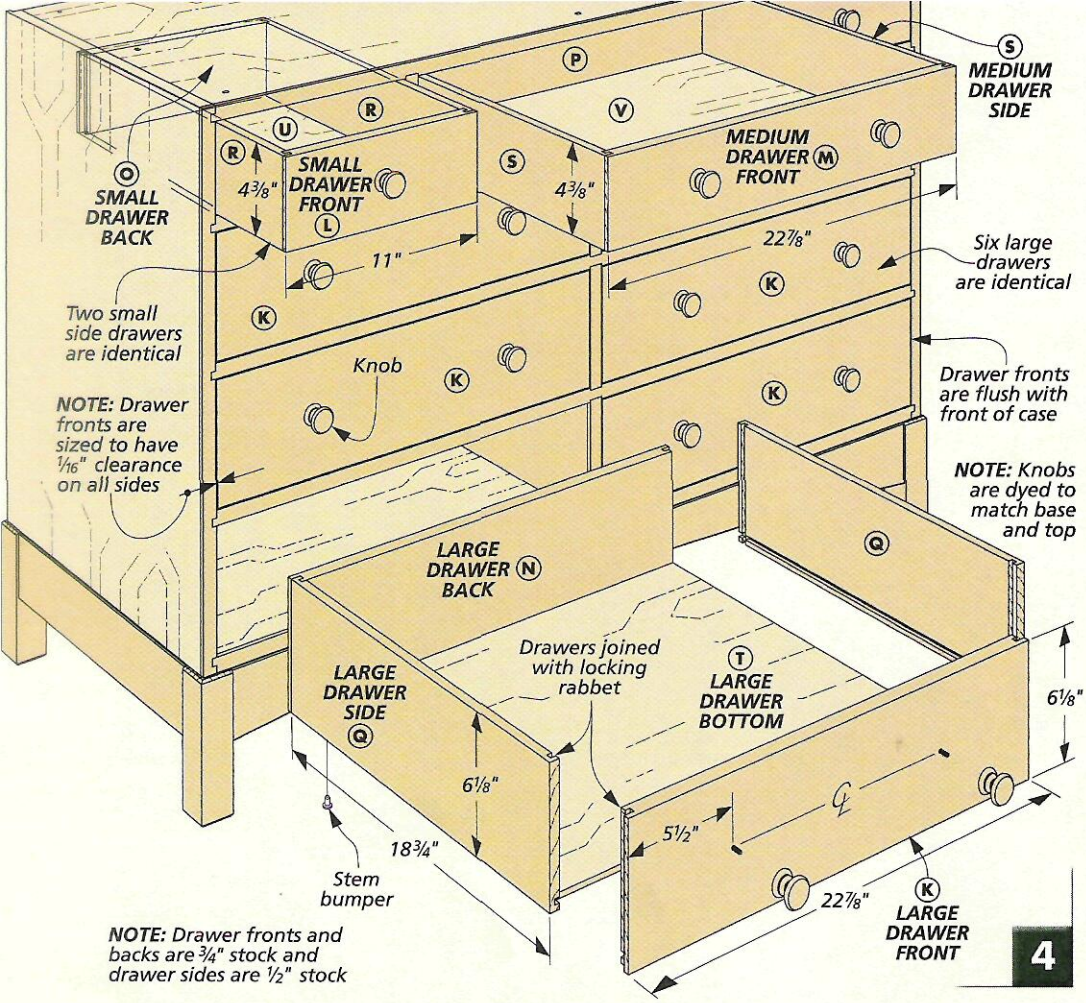

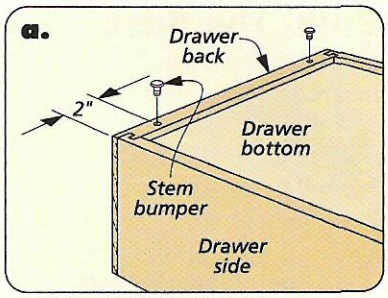

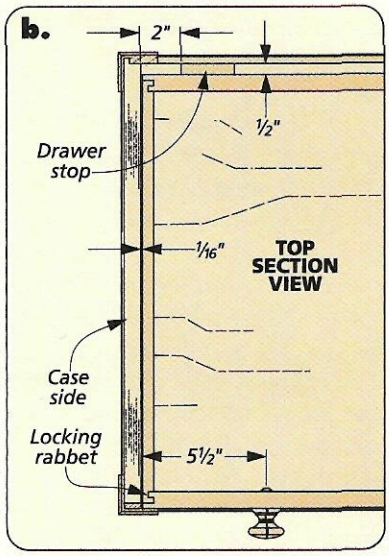

Nine Easy Drawers

After the case and base are assembled, you can start work on the nine drawers that fill the case. Except for their sizes, they're all identical and the joinery is pretty easy. Just a locking rabbet, front and back (Fig. 4b).

Start by cutting the *drawer fronts (K, L, M)* and *backs (N, O, P)* to size from ¾" stock and the *drawer sides (Q, R, S)* from ½" stock. I gave the drawer fronts plenty of clearance — 1/16" on all four sides of their openings. This, along with the stem bumpers, will give them an easy slide all year round. The drawer fronts sit flush with the case front and the depth of the drawers allows for stops at the back of the case (Fig. 4b).

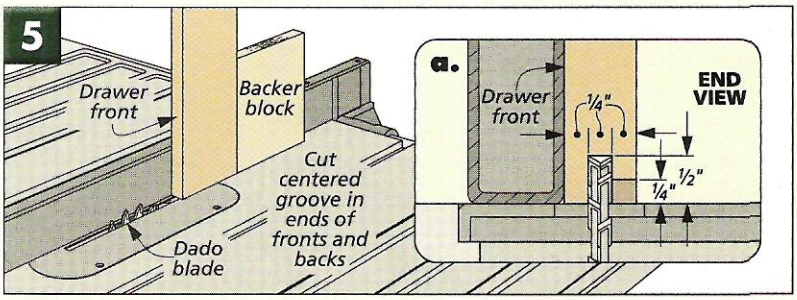

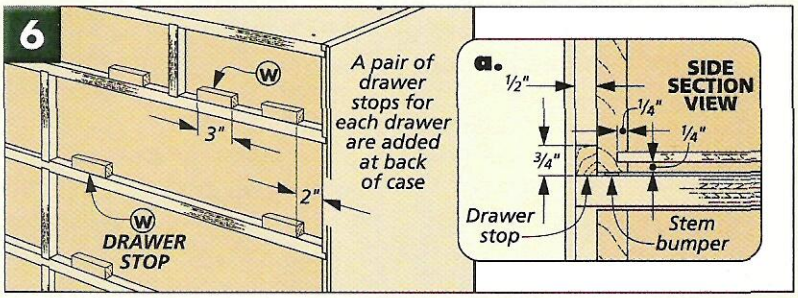

▲ *Plastic stem bumpers will give the drawers a smooth slide.*

LOCKING RABBET. The locking rabbet joint is a simple job for the table saw and dado blade. Figs. 5 and 5a show how to get started. After a groove is cut in the ends of the fronts and backs, the next step is to lay the pieces flat on the inside face and cut into the groove to form a tongue. Finally, a dado in each end of the sides will "lock" the parts together. A groove sized for the 1/4" plywood bottom completes the joinery.

ASSEMBLY. Once you've cut the *bottoms (T, U, V)* to size, the drawers can be assembled. I made an extra effort to keep them square to save time with fitting later on. A couple of stem bumpers at the back of each drawer and the knobs are the final details (Figs. 4 and 4a). (You'll want to dye the knobs before installing them on the drawers.)

STOPS. After the drawers are assembled, the *stops (W)* can be installed. Figs. 6 and 6a show the arrangement. Adjusting the stops will allow you to get a good fit on the drawers. When the drawers are perfectly flush across the front, the clean lines will really stand out.

Top and Back

With the drawers completed, you're in the final stretch. All that's left is to make and attach the solid cherry top and add the plywood back (Fig. 7).

TOP. The top is the first order of business. It's easier to fasten it to the case before the back is added. The *top (X)* is first glued up out of 3/4" stock and then trimmed to size.

As you may have seen earlier, it gets the same dye treatment as the base and the knobs. But first, I routed a 1/16" chamfer on the top and bottom edges of the front and sides.

Fig. 7b shows how the top is attached. The "loose" screws in the front and middle give it a little room to expand and contract.

BACK & FINISH. After the 1/4" plywood *back (Y)* is cut to size, it can be fastened in place with countersunk screws (Fig. 7a). And after a few coats of wiping varnish, the dresser is ready for use. W

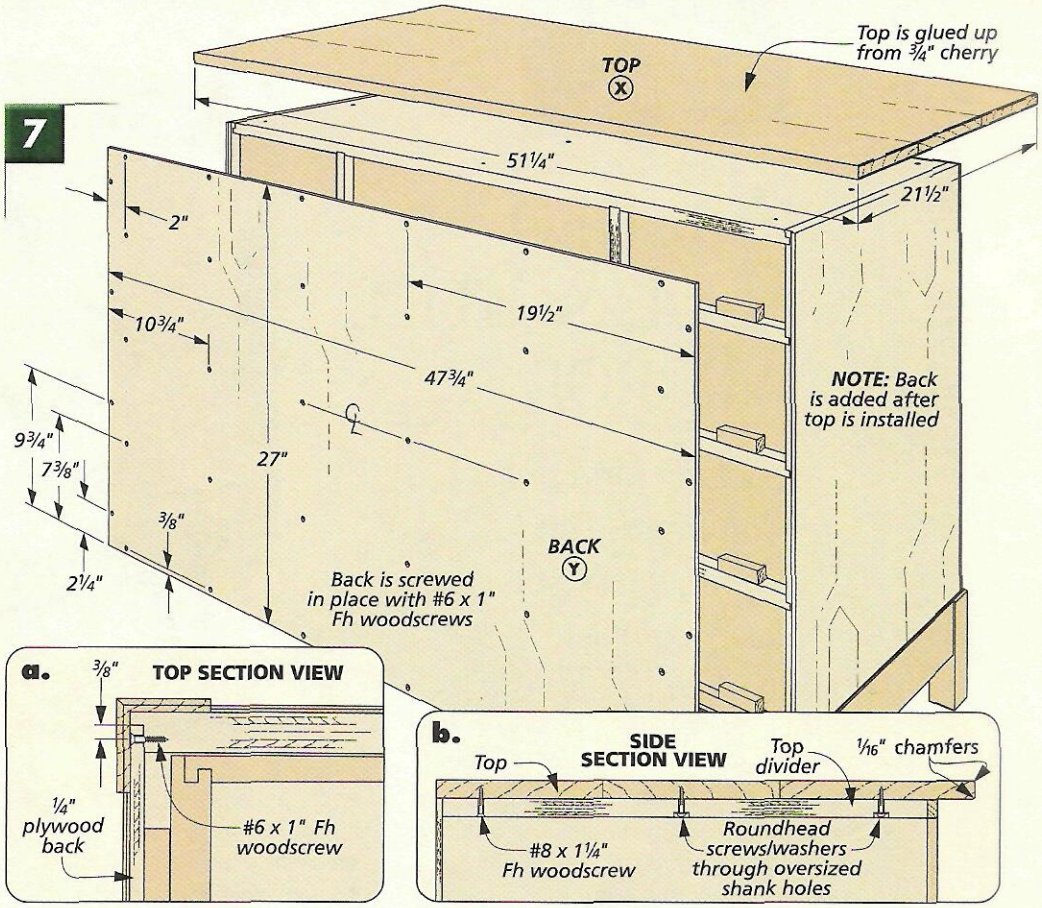

MATERIALS, SUPPLIES, & CUTTING DIAGRAM

A	Sides (2)	3/4 ply. - 19 3/4 x 27
B	Horizontal Dividers (5)	3/4 ply. - 19 1/2 x 47 1/4
C	Upper Vert. Dividers (2)	3/4 ply. - 19 1/2 x 4 3/4
D	Lower Vert. Dividers (3)	3/4 ply. - 19 1/2 x 6 1/2
E	Edging	1/4 x 3/4 - 340 rgh.
F	Legs (4)	1 3/4 x 1 3/4 -7
G	Side Rails (2)	3/4 x 3 1/2 -19
H	Front/Back Rails (2)	3/4 x 3 1/2 - 47 1/4
I	Corner Blocks (4)	3/4 x 3 1/2 -7
J	Cleats (2)	3/4 x 3/4 -5
K	Large Drawer Fronts (6)	3/4 x 6 1/8 - 22 7/8
L	Small Drawer Fronts (2)	3/4 x 4 3/8 - 11
M	Medium Drawer Front (1)	3/4 x 4 3/8 - 22 7/8
N	Large Drawer Backs (6)	3/4 x 6 1/8 - 22 7/8
O	Small Drawer Backs (2)	3/4 x 4 3/8 - 11
P	Medium Drawer Back (1)	3/4 x 4 3/8 - 22 7/8
Q	Large Drawer Sides (12)	1/2 x 6 1/8 - 18 3/4
R	Small Drawer Sides (4)	1/2 x 4 3/8 - 18 3/4
S	Medium Drawer Sides (2)	1/2 x 4 3/8 - 18 3/4
T	Large Dwr. Bottoms (6)	1/4 ply. - 18 1/4 x 22 3/8
U	Small Dwr. Bottoms (2)	1/4 ply. - 18 1/4 x 10 1/2
V	Medium Dwr. Bottom (1)	1/4 ply. - 18 1/4 x 22 3/8
W	Drawer Stops (18)	1/2 x 3/4 - 3
X	Top (1)	3/4 x 21 1/2 - 51 1/4
Y	Back (1)	1/4 ply. - 27 x 47 3/4

- (16) 1 1/4" Wood Knobs w/Screws
- (38) #6 x 1" Fh Woodscrews
- (25) #8 x 1 1/4" Fh Woodscrews
- (6) #8 x 1 1/4" Rh Woodscrews w/Washers
- (36) Plastic Stem Bumpers

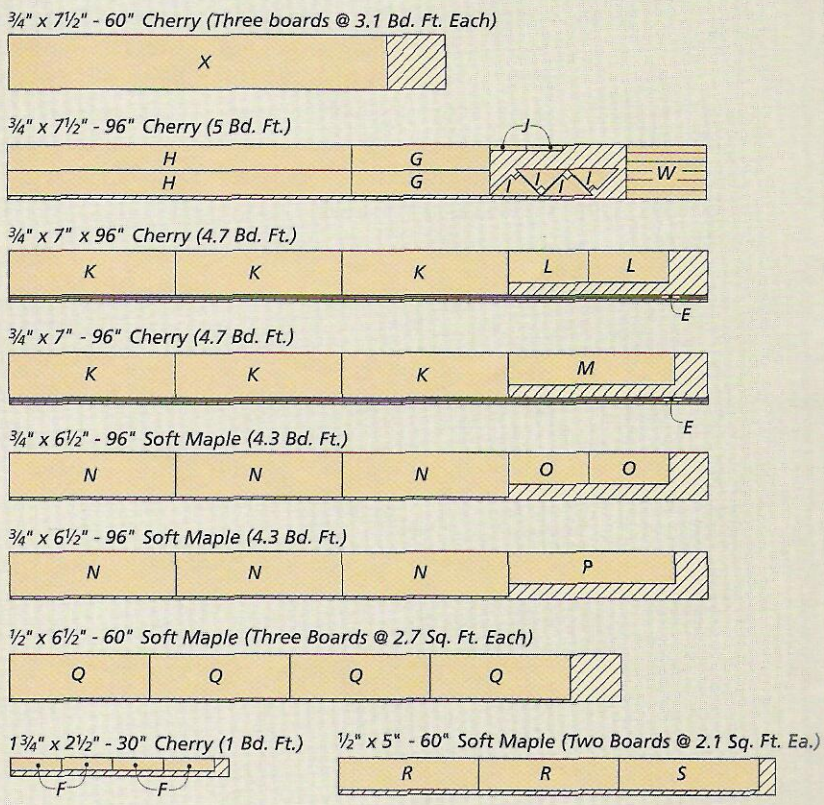

ALSO NEEDED: Two 48" x 96" sheets 3/4" Cherry Plywood
Two 48" x 96" sheets 1/4" Plywood

WEEKEND PROJECT

ARCHED RAIL & STILE MIRROR

Looking for a project with mortise and tenon joinery you can easily complete in a weekend? This is it.

The construction of this attractive mirror frame is about as simple as can be. As you can see in Fig. 1, it's really nothing more than a rail and stile frame with a decorative cap added across the top.

RAILS AND STILES. The *stiles (A)* are cut to size from 1" stock and the *lower* and *upper rails (B, C)* from 3/4" stock. Since the frame is flush across the back, the stiles will stand 1/4" proud of the rails. The best way to accomplish the mortise and tenon joinery is to offset the mortises in the stiles as shown in Fig. 1a. This way, the tenons on the ends of the rails can still be centered.

Once the joinery was completed, I cut a gentle curve into the top rail to mimic the front rail of the dresser base. And then to give the frame a little softer look, I routed a 1/16" chamfer on all the inside and outside edges (except the top and tenoned ends).

THE CAP. Once the stiles and rails are assembled, the *cap (D)* can be added. It also gets a small chamfer on three sides, top and bottom, and is then glued and screwed to the frame, flush at the back (Fig. 1a).

RABBET. Routing the rabbet for the mirror and hardboard backer isn't difficult. But it takes a little care to get a clean shoulder. Start with the rabbeting bit set to make a shallow cut (about 1/8" deep) and then work down to the full depth. Make the final pass very shallow and you'll get a nice, crisp shoulder. The corners can be squared-up with a chisel.

Once the frame is dyed and finished, installing the mirror and backer is a simple job (Fig. 1b). Adding a pair of flush-mount hangers will hold the frame to the wall. W

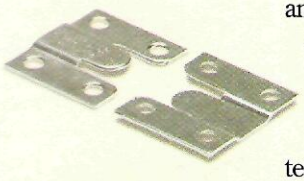

▲ *These flush-mount hangers make the installation easy.*

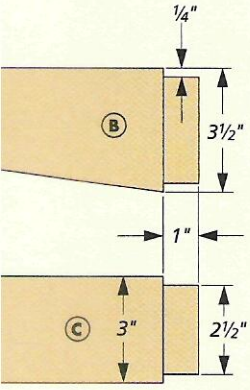

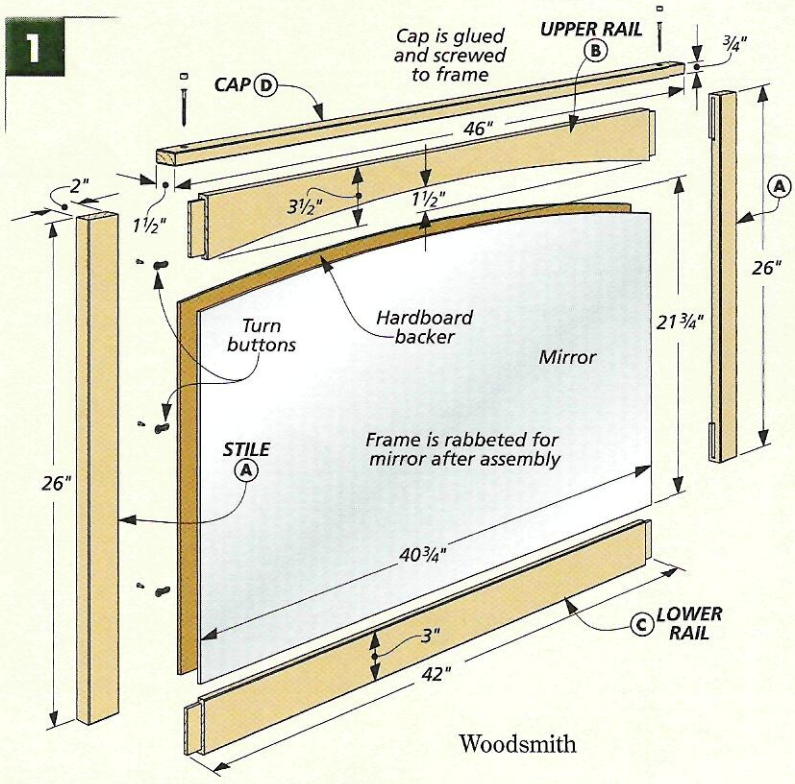

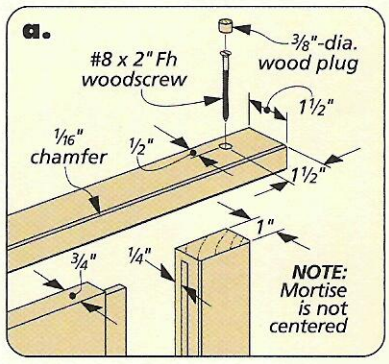

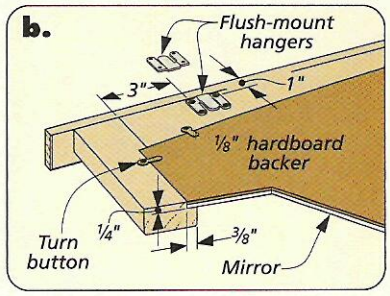

SOURCES

Pine Cupboard

The pine cupboard on page 8 requires only a few, simple hardware items. The satin-nickel, no-mortise hinges came from *Rockler* (#54533). And I found the matching knob (*Amerock* BP1443-g10), the catch and the shelf supports locally.

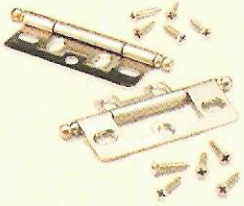

Milk Paint

The milk paint that I used on the pine cupboard was made by *The Old Fashioned Milk Paint Co.* You can call the company or visit their website listed at right to find a local dealer. Or it can be purchased through *The Woodsmith Store.*

Computer Cabinet

All of the hardware for the computer cabinet is available from *Rockler* and we've listed the part numbers.

LOWER CABINET. You'll need two pairs of black, full-extension drawer slides — one 16" (#89682) and one 20" (#89707).

The 270° *Aximat* hinges used on the doors worked great. You'll need two pairs in black (#57506). And also a 1½" x 36" piano hinge (#19283) for the front of keyboard drawer.

I chose a couple of 1¼" rubbed-bronze knobs to go on the doors (#43131). The metal turn buttons (#27912), grommet vents (#32064) and the Flexi-grommet (#35555) are the only other items.

UPPER CABINET. For the upper cabinet I used some of the same hardware. You'll need two pair of the *Aximat* hinges and a couple knobs. And again you'll need metal turn buttons, grommet vents and a large Flexigrommet.

CD CASE. I picked out a 3" rubbed-bronze cup pull (#43114) for the drawer.

Woodsmith Project Supplies is offering a kit that includes all of the hardware needed to build the desk, the upper cabinet and two CD cases. All you'll need to provide is the lumber. See the box below for information on how to order the hardware kit.

- Computer Cabinet
7148100 .....$187.95

Nine-Drawer Dresser

For the dresser, you'll only need some screws and a couple of other hardware items. The 1¼"-dia. cherry pulls (No. K92UC) and the 1¼"-long screws (No. S14) to install them came from *Grand River Wood Products*. The plastic stem bumpers (#28373) are from *Rockler*.

The *J. E. Moser's Aniline Dye* I used on the top, knobs, and base of the dresser is available from *Woodworker's Supply*.

Rail & Stile Mirror

The most important item you'll need to buy is an ⅛"-thick mirror cut to fit the rabbeted frame. An easy way to get a good fit on the mirror is to cut the hardboard backer to fit the frame (not too tight) and then take it to your local glass shop as a pattern. A cardboard pattern would also work.

The easy-to-use flush-mount hangers (#29975) and the metal turn buttons (#27912) are from *Rockler*.

Online Extras

If you don't have internet access, we'll mail a copy of the Online Extras to you. Just send a self-addressed, stamped #10 envelope to:

Woodsmith No. 148
Online Extras
P. O. Box 842
Des Moines, IA 50304

MAIL ORDER SOURCES

Similar project supplies may be ordered from the following companies:

Rockler
800-279-4441
rockler.com
Aximat Hinges, Cup Pulls, Drawer Slides, Flush-Mount Hangers, Grommets, Knobs, No-Mortise Hinges, Piano Hinges, Turn Buttons, Vents

Woodsmith Store
800-835-5084
Cup Pulls, Drawer Slides, Grommets, Knobs, Milk Paint, Piano Hinges, Vents

Grand River Wood Products
800-475-4001
grandriverwood.com
Cherry Knobs

Lee Valley
800-871-8158
leevalley.com
Cherry Knobs, Cup Pulls, Drawer Slides Grommets, Piano Hinges, Vents

Old Fashioned Milk Paint Co.
978-448-6336
milkpaint.com
Milk Paint

Woodcraft
800-225-1153
woodcraft.com
Cherry Knobs, Grommets, No-Mortise Hinges, Piano Hinges

Woodworker's Supply
800-645-9292
woodworker.com
Drawer Slides, 270° Hinges, J.E. Moser's Aniline Dye, Piano Hinges, Grommets, Knobs, Turn Buttons

WOODSMITH PROJECT SUPPLIES

We now feature hardware from ROCKLER in many of our new projects kits. To order, please use our toll-free order line, see below. It's open Monday through Friday, from 8 AM to 5 PM Central Time. Before calling, please have your VISA, MasterCard, Discover, or American Express card ready.

If you would prefer to mail in an order, please call the toll-free phone number below for more information concerning shipping charges as well as any applicable sales tax.

1-800-444-7527

Woodsmith *on the web*

- "Online Extras" - Plans, Patterns, & More
- Over 100 Woodworking Tips Online
- Visit Our Readers' Project Photo Gallery
- Project Plans You Can Download
- Catalog of Project Kits, Tools, Jigs, & Plans
- Forums for Woodworking, Tools, & Classifieds
- Links to Other Woodworking Sites
- Order *Woodsmith* & *ShopNotes* Back Issues

www.woodsmith.com

Online Customer Service

Click on Subscriber Services at **www.woodsmith.com**

- Access your account status
- Change your mailing or email address
- Pay your bill
- Renew your subscription
- Tell us if you've missed an issue
- Find out if your payment has been received

A LAST LOOK

FINAL DETAILS

▲ **Computer Cabinet.** *This classic-looking cabinet features simple plywood construction, wrap-around doors, and a keyboard drawer with a built-in wrist rest. Best of all, when you're done working, you can close the doors and keep everything out of sight. Instructions begin on page 16.*

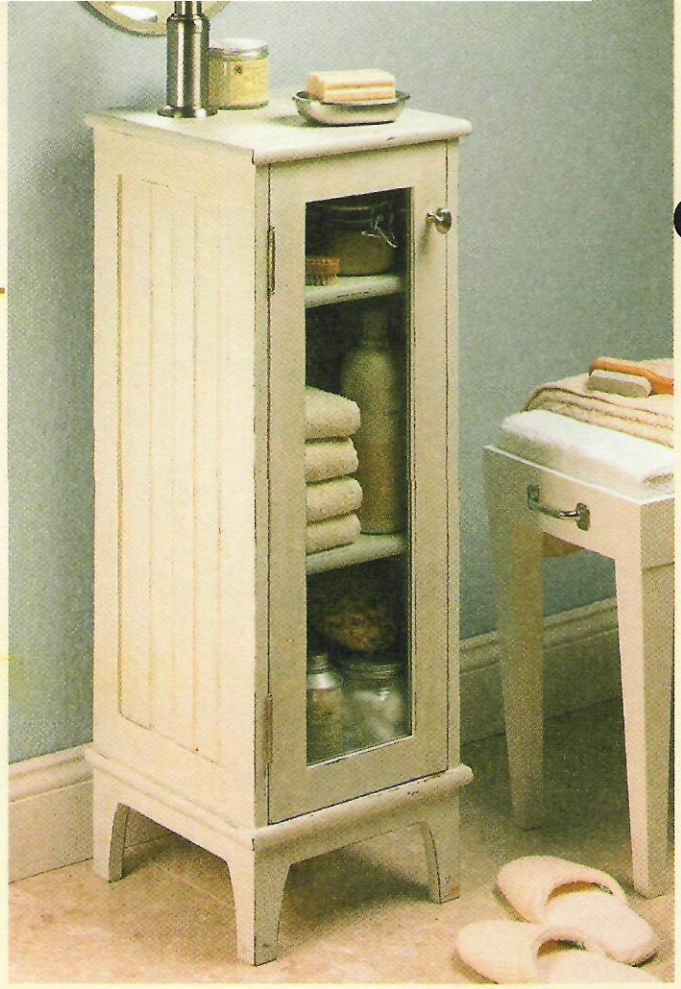

▲ **Country Pine Cupboard.** *Three table saw joints — stub tenon and groove, miter and spline, and bridle joint come together in this country-style project. See page 8 for complete plans. Turn to page 14 for our shop-tested antique, milk paint finish technique.*

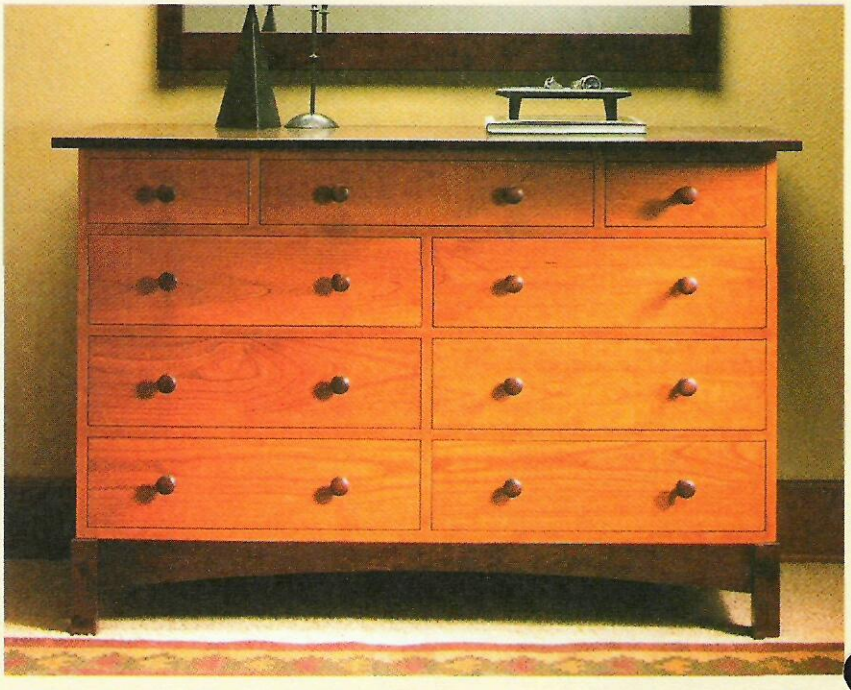

▲ **Nine-Drawer Dresser.** *With its clean lines and contrasting stain, it's easy to like this elegant dresser. It's hard to believe plywood can look so good. Plus, learn a few tips for applying edging and simplifying case construction. The detailed instructions begin on page 26. Plans for a matching mirror start on page 34.*

Woodsmith

OPTIONAL DRESSER TOP & BASE

This optional top and base give the dresser a slightly more traditional look. I added a few more "curves" and didn't use the dark cherry dye on the knobs, base, and top.

BASE. I started with the base. When you take a look at Fig. 1 you'll see how it goes together. It's really nothing more than an apron, mitered at the front corners, that captures a plywood center panel.

With the four apron pieces cut to size, you'll first need to rabbet the top inside edges of the front and sides (Fig. 1b). This rabbet holds the center panel. And next a simple round-over will soften the outside edges. If you look close, you'll see a short shoulder here (Fig. 1b).

At this point the front and side pieces can be mitered to length. Then cut the back piece to fit between the sides. Finally, you can lay out and cut the gentle, arching curves (Figs. 1 and 1a).

I assembled the frame with a reinforcing block glued in each corner. And adding the ¾" plywood center panel completes the base. The panel sits on top of the back apron piece.

TOP. For the optional top, I added a cove under the solid-wood top to create a pleasing, built-up look. As Fig. 2 shows, the cove pieces form a frame that supports the top. There's nothing difficult about piecing the frame together. The only trick here is attaching the frame and solid top to the case. And this is just a matter of a few holes in the right places.

First, I cut the frame pieces from ¾" stock and routed the cove on the front and sides. Next, the front and sides are mitered and the back and center fillers are cut to fit (Fig. 2).

Now before attaching the frame pieces to the case, you need to drill some ⅜" holes that will line up with the mounting holes in the top divider (Fig. 2). These holes allow your screws to pass through the frame and into the top (Fig. 2a).

Once the cove frame is added, the ¾"-thick solid-wood top can be made and installed. A roundover on the bottom of the front and sides edges is all it needs (Fig. 2a).

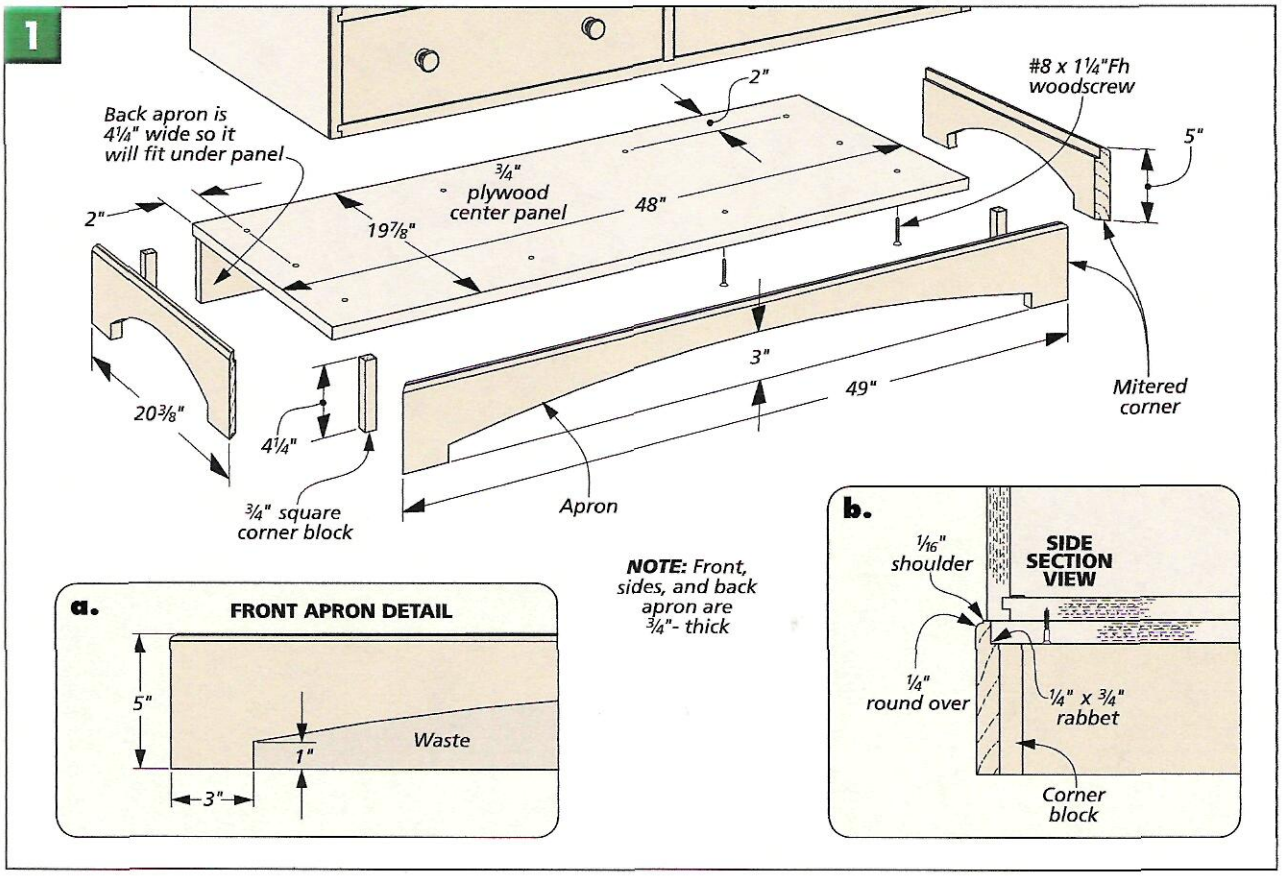
1
Back apron is 4¼" wide so it will fit under panel
2"
¾" plywood center panel
48"
19⅞"
#8 x 1¼"Fh woodscrew
5"
3"
49"
Mitered corner
20⅜"
4¼"
¾" square corner block
Apron
NOTE: Front, sides, and back apron are ¾"- thick
a.
FRONT APRON DETAIL
5"
1"
Waste
3"
b.
SIDE SECTION VIEW
1/16" shoulder
¼" round over
¼" x ¾" rabbet
Corner block

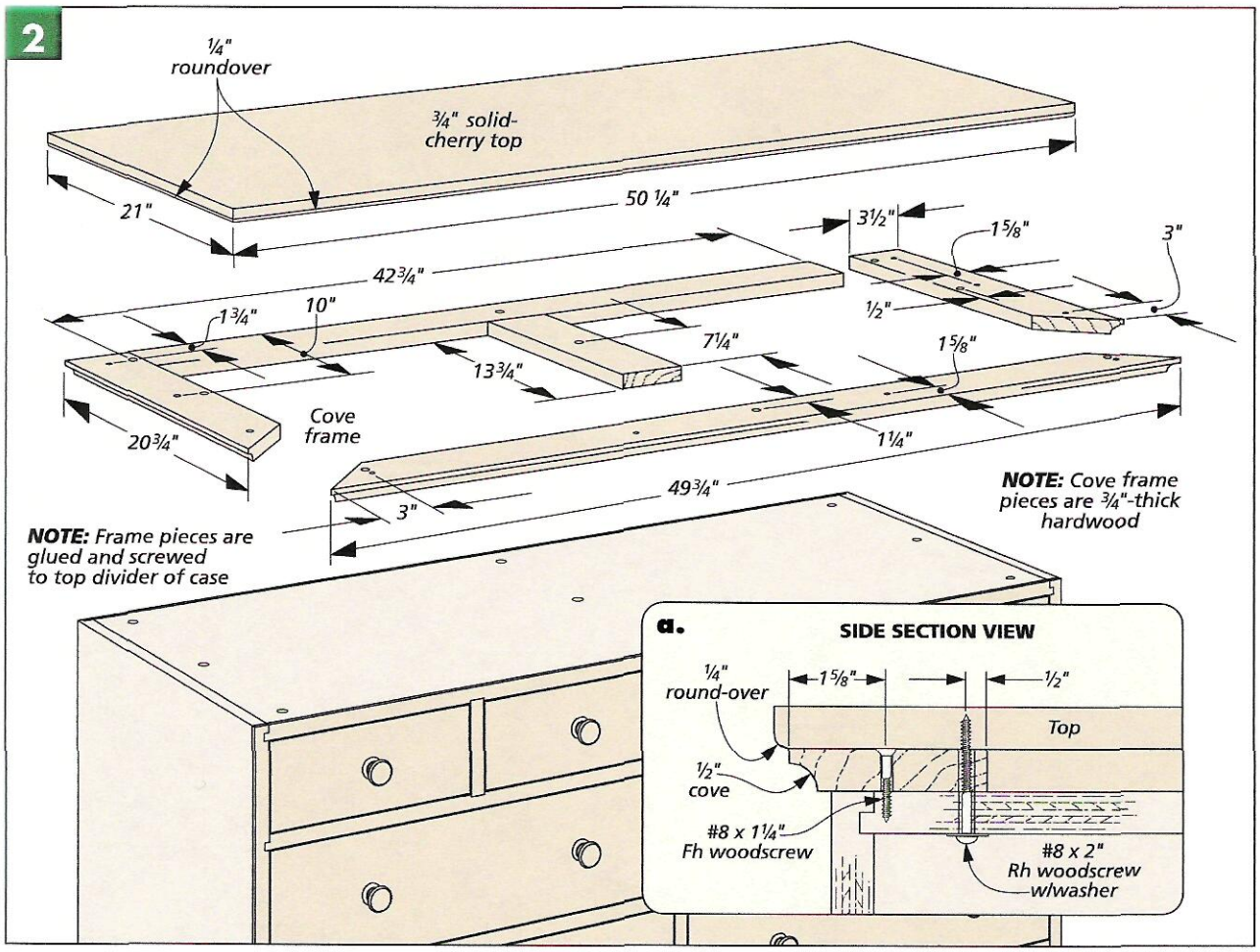
2
¼" roundover
¾" solid-cherry top
21"
50 ¼"
42¾"
3½"
1⅝"
3"
½"
1¾"
10"
7¼"
13¾"
1⅝"
20¾"
Cove frame
1¼"
49¾"
3"
NOTE: Frame pieces are glued and screwed to top divider of case
NOTE: Cove frame pieces are ¾"-thick hardwood
a.
SIDE SECTION VIEW
¼" round-over
1⅝"
½"
Top
½" cove
#8 x 1¼" Fh woodscrew
#8 x 2" Rh woodscrew w/washer